DOC343.52.90501

TU5300 sc/TU5400 sc

08/2021, Edition 6

User Manual

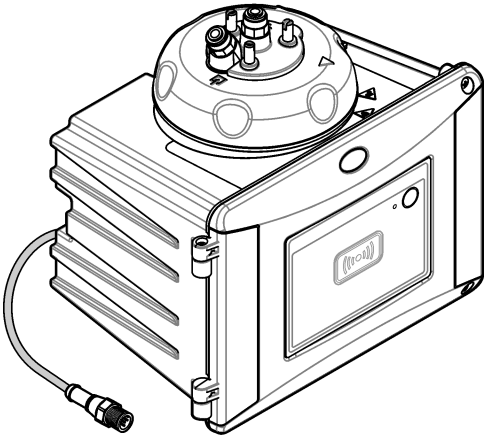

Section 1 Specifications ... 3
Section 2 General information ... 4
2.1 Safety information ... 5
2.1.1 Use of hazard information ... 5
2.1.2 Precautionary labels ... 5
2.1.3 Class 2 laser product ... 6
2.1.4 RFID module ... 6
2.1.4.1 Safety information for RFID modules ... 7
2.1.4.2 FCC conformance for RFID ... 7
2.1.5 Compliance and certification ... 7
2.2 Product overview ... 8
2.3 Status indicator light ... 9
2.4 Product components ... 10
Section 3 Installation ... 11
3.1 Installation guidelines ... 11
3.2 Installation overview ... 11
3.3 Wall mount ... 13
3.3.1 Install with the wall mount bracket ... 13
3.3.2 Install directly on a wall ... 14
3.4 Install the desiccant cartridge ... 15
3.5 Replace the cleaning lid screws ... 17
3.6 Install the service bracket ... 17
3.7 Install the flow sensor (optional) ... 18
3.8 Install the automatic cleaning module (optional) ... 18
3.9 Connect to an SC controller ... 18
3.10 Plumbing ... 19
3.10.1 Plumb the instrument ... 19
3.10.2 Set the flow rate ... 22
Section 4 User navigation ... 22
Section 5 Operation ... 22
5.1 Configure the instrument ... 22
5.2 Show instrument information ... 24
5.3 Compare process and laboratory measurements ... 24
5.3.1 Collect a grab sample ... 25
5.3.2 Compare measurements with RFID ... 25
5.3.3 Compare measurements with Link2SC ... 26
5.3.3.1 Configure the Link2SC settings ... 27
Section 6 Calibration ... 27
6.1 Configure the calibration settings ... 28
6.2 Calibrate with a syringe ... 29
6.2.1 Make 4000-NTU Formazin stock solution ... 31
6.2.2 Prepare Formazin standards ... 31
6.3 1-point calibration without verification ... 32
6.3.1 Troubleshooting ... 34
6.3.1.1 Status indicator light ... 34

6.3.2 Prevent vial contamination 34
6.4 Calibrate with vials without RFID 35
6.4.1 Make 4000-NTU Formazin stock solution 35
6.4.2 Prepare the standard vial(s) 35
6.4.2.1 Make 4000-NTU Formazin stock solution 36
6.4.2.2 Prepare Formazin standards 37
6.4.3 Calibration procedure—vials without RFID 37
Section 7 Verification 39
7.1 Configure the verification settings 39
7.2 Do a calibration verification with a syringe 40
7.3 Do a calibration verification with a sealed vial or glass rod 43
7.4 Show the calibration or verification history 44
Section 8 Maintenance 44
8.1 Maintenance schedule 45
8.2 Clean spills 45
8.3 Clean the instrument 46
8.4 Clean the vial 46
8.4.1 Do a chemical vial cleaning 47
8.5 Clean the vial compartment 48
8.6 Replace the vial 49
8.7 Replace the desiccant cartridge 51
8.8 Replace the tubing 51
Section 9 Troubleshooting 52
9.1 Reminders 52
9.2 Warnings 52
9.3 Errors 53
9.4 Fix water ingress 54
9.4.1 Setup after water ingress error 55
Section 10 Replacement parts and accessories 56

Section 1 Specifications

Specifications are subject to change without notice.

Specification	Details
Measurement method	Nephelometry with scattered light collected at a 90-degree angle to the incident light and 360 degrees around the sample vial
Primary compliance method	EPA approved Hach Method 10258[1]
Enclosure	Material: ASA Luran S 777K / RAL7000, TPE RESIN Elastocon® STK40, Thermoplastic Elastomer TPS-SEBS (60 Shore) and stainless steel
IP rating	Electronic compartment IP55; process head/Automatic Cleaning Module attached to the instrument and all of the other functional units IP65[2]
Dimensions (W x D x H)	268 x 249 x 190 mm (10.6 x 9.8 x 7.5 in.)
Weight	Instrument with the process head: 2.7 kg (6.0 lb); Instrument with the optional automatic cleaning module: 5.0 kg (11.0 lb)
Power requirements	12 VDC (+2 V, –4 V), 14 VA
Protection class	III
Pollution degree	2
Overvoltage category	II
Environmental conditions	Indoor use
Operating temperature	0 to 50 °C (32 to 122 °F)
Storage temperature	–40 to 60 °C (–40 to 140 °F)
Humidity	5 to 95% relative humidity, non-condensing
Sensor cable length	TU5x00 sc without Automatic Cleaning Module or flow sensor: 50 m (164 ft); TU5x00 sc with Automatic Cleaning Module: 10 m (33 ft)
Laser	**Class 2 laser product:** Contains a non user-serviceable class 2 laser.
Optical light source	650 nm, maximum 0.43 mW
Fittings	Sample inlet and outlet: ¼-in. OD tubing (optional tubing adapter, ¼ in. to 6 mm)
Altitude	2000 m (6562 ft) maximum
Tubing requirements	Polyethylene, polyamide or polyurethane tubing. Calibrated ¼ in. OD, +0.03 or –0.1 mm (+0.001 or –0.004 in.)
Measurement units	TU5300 sc: NTU, FNU, TE/F, EBC or FTU; TU5400 sc: NTU, mNTU[3], FNU, mFNU, TE/F, EBC, FTU or mFTU.
Range	0 to 700 NTU, FNU, TE/F and FTU; 0 to 175 EBC

1 http://www.hach.com
2 Water drops, puddles or runlets that will not damage the instrument may be in the inner of the enclosure.
3 1 mNTU = 0.001 NTU

Specification	Details
Method detection limit	0.0001 NTU at 25 °C (77 °F)
Response time	T90 < 30 seconds at 100 mL/min
Signal averaging	TU5300 sc: 30–90 seconds TU5400 sc: 1–90 seconds
Accuracy	± 2% or ± 0.01 NTU (the larger value) from 0 to 40 NTU ± 10% of reading from 40 to 700 NTU based on Formazin primary standard at 25 °C (77 °F)
Linearity	Better than 1% for 0 to 40 NTU based on Formazin primary standard at 25 °C (77 °F).
Repeatability	TU5300 sc: 0.002 NTU or 1% (the larger value) at 25 °C (77 °F) (> 0.025 NTU range); TU5400 sc: 0.0006 NTU or 1% (the larger value) at 25 °C (77 °F) (> 0.025 NTU range)
Stray light	< 0.01 NTU
Resolution	0.0001 NTU (0.0001 to 0.9999/1.000 to 9.999/10.00 to 99.99/100.0 to 700 NTU) Default: TU5300 sc: 0.001 NTU and TU5400 sc: 0.0001 NTU
Air bubble compensation	Physical, mathematical
Sample requirements	Temperature: 2 to 60 °C (35.6 to 140 °F) Conductivity: 3000 µS/cm maximum at 25 °C (77 °F) Flow rate[4]: 100 to 1000 mL/min; optimal flow rate: 200 to 500 mL/min Pressure: 6 bar (87 psi) maximum compared to air, 2 to 40 °C (35.6 to 104 °F) sample; 3 bar (43.5 psi) maximum compared to air, 40 to 60 °C (104 to 140 °F) sample
Calibration options	StablCal® or Formazin: 1-point calibration (20 NTU) for 0 to 40 NTU measurement range, 2-point calibration (20 and 600 NTU) for 0 to 700 NTU (full) measurement range or 2- to 6-point custom calibration for a measurement range of 0 NTU to the highest calibration point.
Verification options	Glass verification rod (solid secondary standard) ≤ 0.1 NTU, StablCal or Formazin
Verification (RFID or Link2SC®)	Verification of the measurement value by comparison of the process and lab measurements with RFID or Link2SC.
Certifications	CE compliant; US FDA accession number: 1420493-xxx. This product complies with IEC/EN 60825-1 and to 21 CFR 1040.10 in accordance with Laser Notice No. 50. Australian RCM.
Warranty	1 year (EU: 2 years)

Section 2 General information

In no event will the manufacturer be liable for direct, indirect, special, incidental or consequential damages resulting from any defect or omission in this manual. The manufacturer reserves the right to

[4] For the best results, operate the instrument at a flow rate of 200 mL/min when the maximum particle size is 20 µm. For larger particles (150 µm maximum), the best flow rate is 350 to 500 mL/min.

make changes in this manual and the products it describes at any time, without notice or obligation. Revised editions are found on the manufacturer's website.

2.1 Safety information

The manufacturer is not responsible for any damages due to misapplication or misuse of this product including, without limitation, direct, incidental and consequential damages, and disclaims such damages to the full extent permitted under applicable law. The user is soley responsible to identify critical application risks and install appropriate mechanisms to protect processes during a possible equipment malfunction.

Please read this entire manual before unpacking, setting up or operating this equipment. Pay attention to all danger and caution statements. Failure to do so could result in serious injury to the operator or damage to the equipment.

Make sure that the protection provided by this equipment is not impaired. Do not use or install this equipment in any manner other than that specified in this manual.

2.1.1 Use of hazard information

⚠ DANGER
Indicates a potentially or imminently hazardous situation which, if not avoided, will result in death or serious injury.

⚠ WARNING
Indicates a potentially or imminently hazardous situation which, if not avoided, could result in death or serious injury.

⚠ CAUTION
Indicates a potentially hazardous situation that may result in minor or moderate injury.

NOTICE
Indicates a situation which, if not avoided, may cause damage to the instrument. Information that requires special emphasis.

2.1.2 Precautionary labels

Read all labels and tags attached to the instrument. Personal injury or damage to the instrument could occur if not observed. A symbol on the instrument is referenced in the manual with a precautionary statement.

	Electrical equipment marked with this symbol may not be disposed of in European domestic or public disposal systems. Return old or end-of-life equipment to the manufacturer for disposal at no charge to the user.
	This symbol, if noted on the instrument, references the instruction manual for operation and/or safety information.
	This symbol indicates the need for protective eye wear.
	This symbol indicates a laser device is used in the equipment.

	This symbol indicates that the marked item can be hot and should not be touched without care.
	This symbol identifies a risk of chemical harm and indicates that only individuals qualified and trained to work with chemicals should handle chemicals or perform maintenance on chemical delivery systems associated with the equipment.
	This symbol indicates radio waves.

2.1.3 Class 2 laser product

⚠ DANGER	
	Personal injury hazard. Never remove covers from the instrument. This is a laser-based instrument and the user risks injury if exposed to the laser.

	Class 2 laser product, IEC60825-1:2014, 650 nm, maximum 0.43 mW Location: Rear of the instrument.
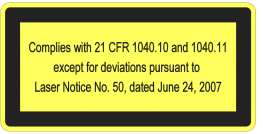	Conforms to U.S. regulations 21 CFR 1040.10 and 1040.11 in accordance with Laser Notice No. 50. Location: Rear of the instrument.
	Caution—Class 2 laser radiation when the lid is open. Do not look into the laser beam. Location: Top of the vial compartment.

This instrument is a Class 2 Laser product. There is only visible laser radiation when the instrument is defective and when the instrument lid is open. This product complies with EN 61010-1, "Safety Requirements for Electrical Equipment for Measurement, Control and Laboratory Use" and with IEC/EN 60825-1, "Safety of Laser Products" and with 21 CFR 1040.10 in accordance with Laser Notice No. 50. Refer to the labels on the instrument that supply laser information.

2.1.4 RFID module

Instruments with the optional RFID module receive and transmit information and data. The RFID module operates with a frequency of 13.56 MHz.

RFID technology is a radio application. Radio applications are subject to national conditions of authorization. The use of instruments with the optional RFID module is currently permitted in the regions that follow:

EU (European Union) countries, EFTA (European Free Trade Association) countries, Turkey, Serbia, Macedonia, Australia, Canada, US, Chile, Ecuador, Venezuela, Mexico, Brazil, South Africa, India, Singapore, Argentina, Columbia, Peru and Panama

The use of instruments with the optional RFID module outside of the above-mentioned regions can violate national laws. The manufacturer reserves the right also to get authorization in other countries. In case of doubt, contact the manufacturer.

2.1.4.1 Safety information for RFID modules

⚠ WARNING

Multiple hazards. Do not disassemble the instrument for maintenance. If the internal components must be cleaned or repaired, contact the manufacturer.

⚠ WARNING

Electromagnetic radiation hazard. Do not use the instrument in dangerous environments.

NOTICE

This instrument is sensitive to electromagnetic and electromechanical interference. These interferences can have an effect on the analysis performance of this instrument. Do not put this instrument near equipment that can cause interference.

Obey the safety information that follows to operate the instrument in accordance with local, regional and national requirements.

- Do not operate the instrument in hospitals and equivalent establishments or near medical equipment, such as pace makers or hearing aids.
- Do not operate the instrument near highly flammable substances, such as fuels, highly flammable chemicals and explosives.
- Do not operate the instrument near combustible gases, vapors or dust.
- Keep the instrument away from strong vibration or shock.
- The instrument can cause interference in immediate proximity to televisions, radios and computers.
- The warranty does not cover improper use or wear.

2.1.4.2 FCC conformance for RFID

This instrument may contain a registered radio frequency identification device (RFID). Refer to Table 1 for the Federal Communications Commission (FCC) registration information.

Table 1 Registration information

Parameter	Value
FCC identification number (FCC ID)	YCB-ZBA987
IC	5879A-ZBA987
Frequency	13.56 MHz

2.1.5 Compliance and certification

⚠ CAUTION

This equipment is not intended for use in residential environments and may not provide adequate protection to radio reception in such environments.

Canadian Radio Interference-Causing Equipment Regulation, ICES-003, Class A:

Supporting test records reside with the manufacturer.

This Class A digital apparatus meets all requirements of the Canadian Interference-Causing Equipment Regulations.

Cet appareil numérique de classe A répond à toutes les exigences de la réglementation canadienne sur les équipements provoquant des interférences.

FCC Part 15, Class "A" Limits

Supporting test records reside with the manufacturer. The device complies with Part 15 of the FCC Rules. Operation is subject to the following conditions:

1. The equipment may not cause harmful interference.
2. The equipment must accept any interference received, including interference that may cause undesired operation.

Changes or modifications to this equipment not expressly approved by the party responsible for compliance could void the user's authority to operate the equipment. This equipment has been tested and found to comply with the limits for a Class A digital device, pursuant to Part 15 of the FCC rules. These limits are designed to provide reasonable protection against harmful interference when the equipment is operated in a commercial environment. This equipment generates, uses and can radiate radio frequency energy and, if not installed and used in accordance with the instruction manual, may cause harmful interference to radio communications. Operation of this equipment in a residential area is likely to cause harmful interference, in which case the user will be required to correct the interference at their expense. The following techniques can be used to reduce interference problems:

1. Disconnect the equipment from its power source to verify that it is or is not the source of the interference.
2. If the equipment is connected to the same outlet as the device experiencing interference, connect the equipment to a different outlet.
3. Move the equipment away from the device receiving the interference.
4. Reposition the receiving antenna for the device receiving the interference.
5. Try combinations of the above.

2.2 Product overview

⚠ DANGER	
	Chemical or biological hazards. If this instrument is used to monitor a treatment process and/or chemical feed system for which there are regulatory limits and monitoring requirements related to public health, public safety, food or beverage manufacture or processing, it is the responsibility of the user of this instrument to know and abide by any applicable regulation and to have sufficient and appropriate mechanisms in place for compliance with applicable regulations in the event of malfunction of the instrument.

The TU5300 sc and the TU5400 sc turbidimeters are used with an SC controller to measure low-range turbidity mostly in finished drinking water applications. Refer to Figure 1.

The TU5300 sc and the TU5400 sc turbidimeters measure scattered light at an angle of 90° in a 360° radius around the axis of the incident light beam.

An optional RFID module and an automatic system check option are available[5]. The RFID module is shown in Figure 1. The RFID module lets process and laboratory turbidity measurements be easily compared. A description of the automatic system check option is given in Configure the instrument on page 22.

PROGNOSYS predictive diagnostic software is available for the TU5300 sc and TU5400 sc turbidimeters. To use PROGNOSYS, connect the turbidimeter to an SC controller with PROGNOSYS.

Instructional videos are available in the support section of the manufacturer's website.

The accessories are shown in Installation overview on page 11.

[5] The RFID module and automatic system check option is only available at the time of purchase.

Figure 1 Product overview

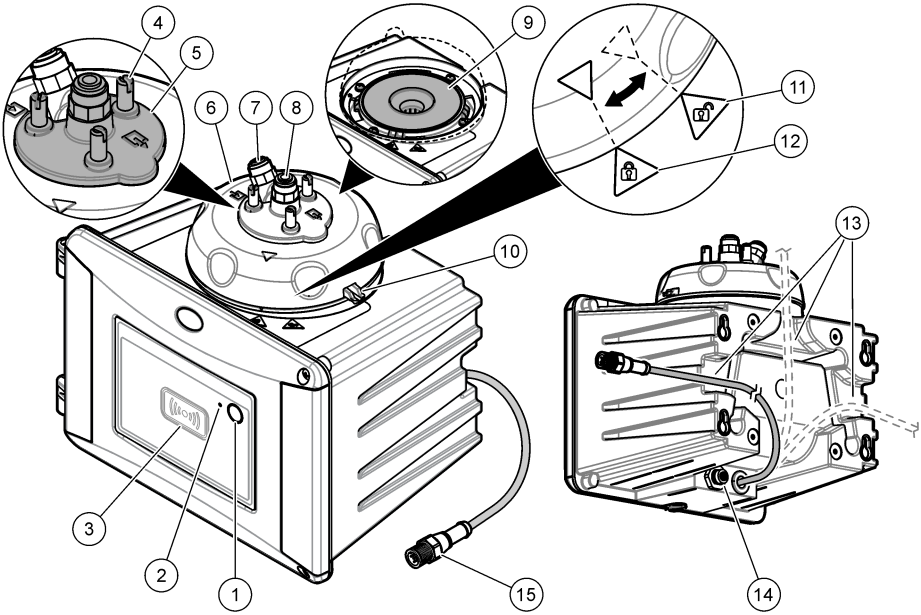

1	Programmable button	**9**	Vial compartment
2	Status indicator light (refer to Status indicator light on page 9)	**10**	Overflow drain
3	RFID module indicator (optional)	**11**	Process head (open)
4	Cleaning lid screws (3x)	**12**	Process head (closed)
5	Cleaning lid	**13**	Channels for cables
6	Process head	**14**	Extension connector for accessories
7	Sample inlet	**15**	Sensor cable
8	Sample outlet		

2.3 Status indicator light

The status indicator light shows the instrument status. Refer to Table 2 for status descriptions.

Note: *The status indicator light is only on when the SC controller power is set to on and the sensor cable is connected to the sc controller.*

Table 2 Status indicator light

Color	Status
Green (stable)	The instrument is in operation. The instrument status is ok—no warnings, errors or reminders.
Green (flashes)	Calibration is complete. The instrument status is ok.
	Verification is complete. The instrument status is ok.
Yellow (stable)	Read the warning that shows on the controller display. Refer to Warnings on page 52 for the warning description and solution.

Table 2 Status indicator light (continued)

Color	Status
Yellow (flashes)	The instrument is in Service Mode.
	An automatic cleaning is in progress.
Yellow (flashes slow)	The optional flow sensor has identified that there is no sample flow or the sample flow is lower than the limit. Read the warning that shows on the controller display. Refer to Warnings on page 52 for the warning description and solution.
Yellow (flashes fast)	The optional flow sensor has identified that the sample flow rate is higher than the limit. Read the warning that shows on the controller display. Refer to Warnings on page 52 for the warning description and solution.
Red (stable)	Read the error that shows on the controller display. Refer to Errors on page 53 for the error description and solution.
Red (flashes)	Calibration or verification was not completed.
	The instrument cannot start calibration or verification for one or more reason that follows. • The standard expired. • The first measurement of the verification standard was done with a different method (EPA/ISO). • The first measurement value of the verification standard is missing.
Blue (stable)	A calibration or verification is started.
Blue (flashes)	A calibration or verification measurement is started.
Blue (flashes fast)	A calibration or verification is started with RFID.

2.4 Product components

Make sure that all components have been received. Refer to Figure 2. If any items are missing or damaged, contact the manufacturer or a sales representative immediately.

Figure 2 Product components

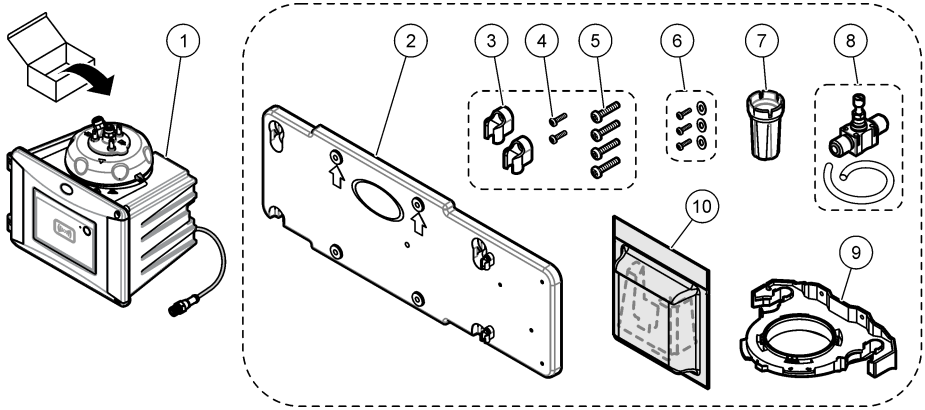

1	TU5300 sc or TU5400 sc	**6**	Cleaning lid screws and washers for hot water applications
2	Wall mount bracket (two tubing clips on bracket)	**7**	Vial replacement tool
3	Tubing clips	**8**	Flow regulator
4	Tubing clip screws, 2.2 x 6 mm	**9**	Service bracket
5	Mounting screws, 4 x 16 mm	**10**	Desiccant cartridge

Section 3 Installation

⚠ CAUTION

Multiple hazards. Only qualified personnel must conduct the tasks described in this section of the document.

3.1 Installation guidelines

NOTICE

Make sure that there is a floor drain near the instrument. Examine the instrument daily for leaks.

This instrument is rated for an altitude of 3100 m (10,710 ft) maximum. Use of this instrument at an altitude higher than 3100 m can slightly increase the potential for the electrical insulation to break down, which can result in an electric shock hazard. The manufacturer recommends that users with concerns contact technical support.

3.2 Installation overview

Figure 3 shows the installation overview with all of the accessories and the clearances necessary.

Figure 3 Installation overview with accessories

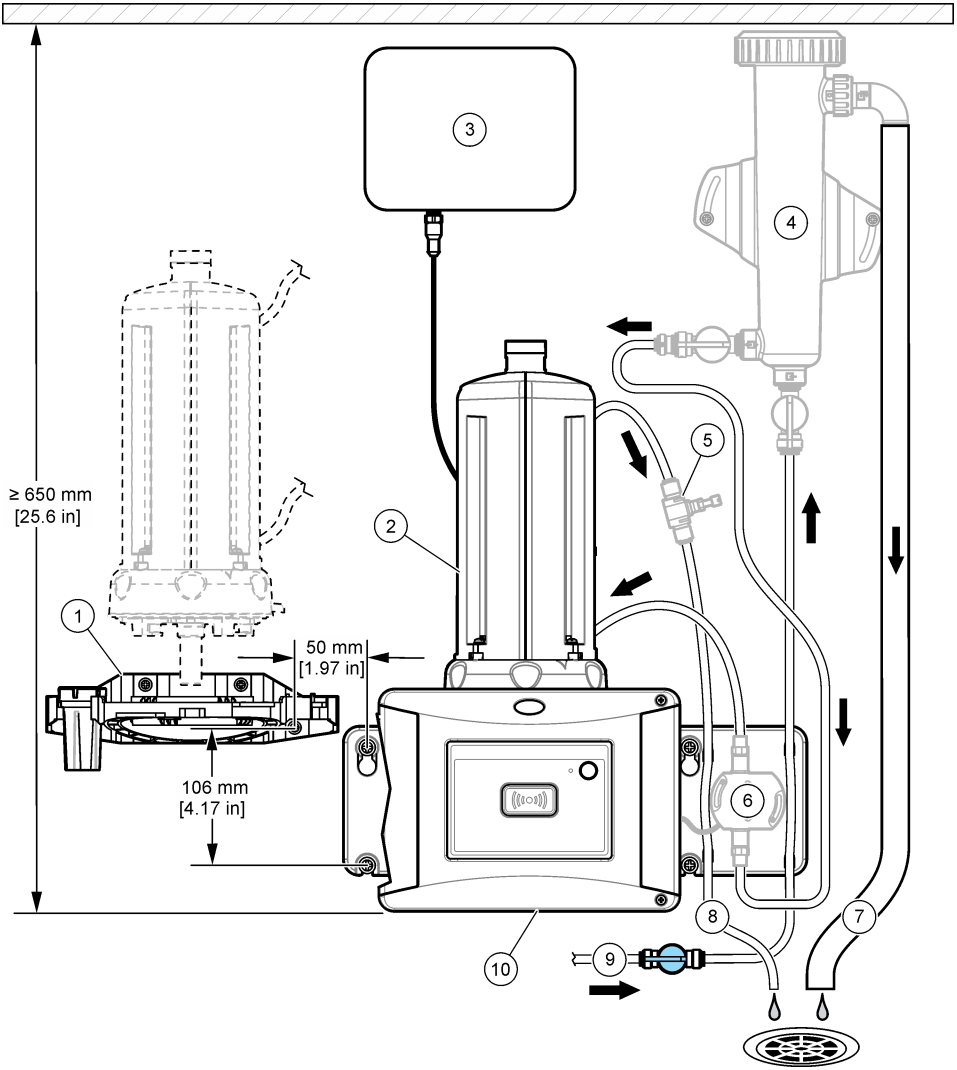

1	Service bracket	**6**	Flow sensor (accessory)
2	Automatic cleaning module (accessory)	**7**	Bubble trap overflow
3	SC controller	**8**	Sample outlet
4	Bubble trap (accessory)	**9**	Sample inlet
5	Flow regulator[6]	**10**	TU5300 sc or TU5400 sc

[6] Not used with the bubble trap.

3.3 Wall mount

Install the instrument on a wall in a vertical position. Install the instrument so that it is level.

3.3.1 Install with the wall mount bracket

Refer to the illustrated steps that follow to install the instrument on a wall with the wall mount bracket. The mounting hardware to install the wall mount bracket on a wall is supplied by the user.

If a 1720D, 1720E, or FT660 instrument is replaced, remove the instrument from the wall. Then do steps 2 to 4 of the illustrated steps that follow to install the instrument on the existing hardware.

Note: *When the accessories are used, the installation location of the tubing clips is different. Refer to the documentation supplied with the accessories for tubing clip installation.*

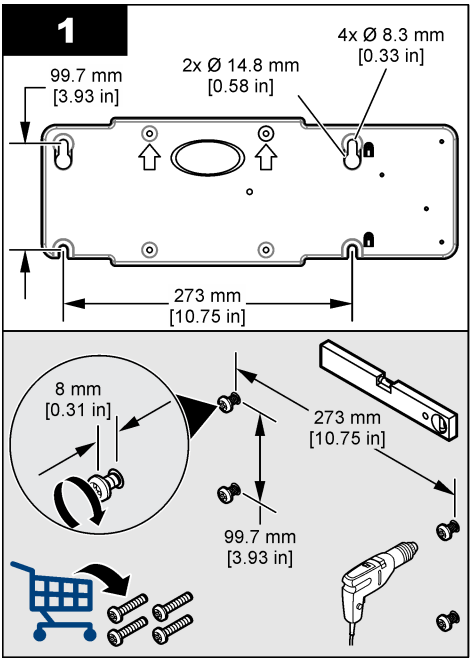

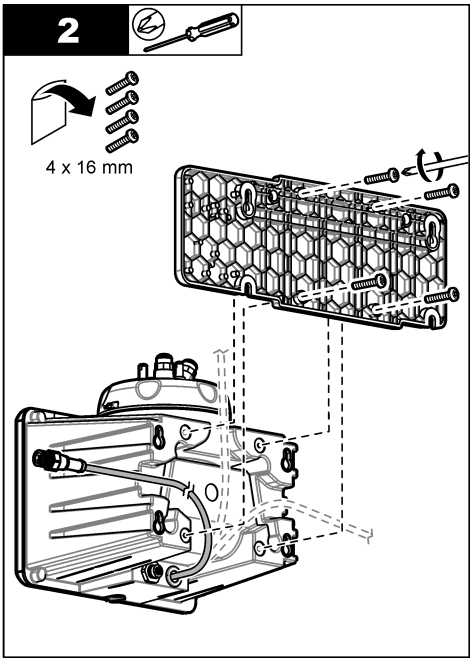

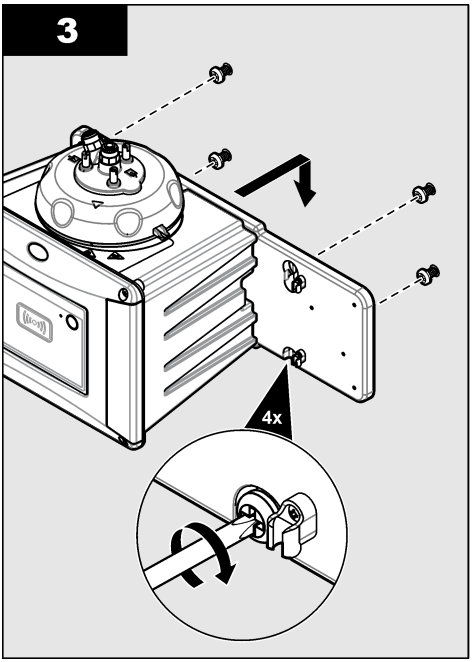

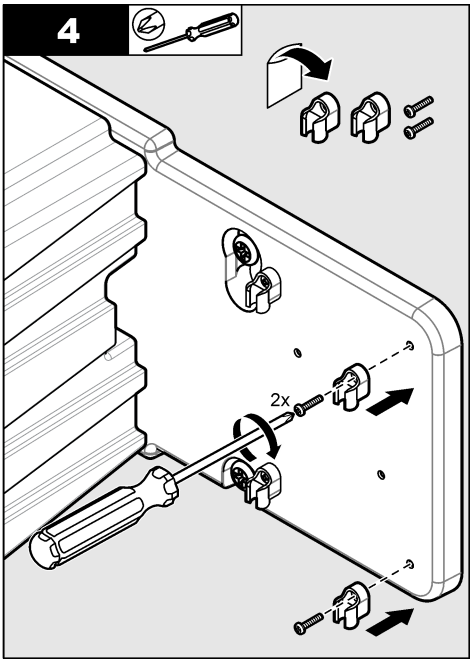

3.3.2 Install directly on a wall

As an alternative, refer to the illustrated steps that follow to install the instrument directly on a wall. The mounting hardware is supplied by the user. Remove the thin, plastic film from the mounting holes on the back of the instrument.

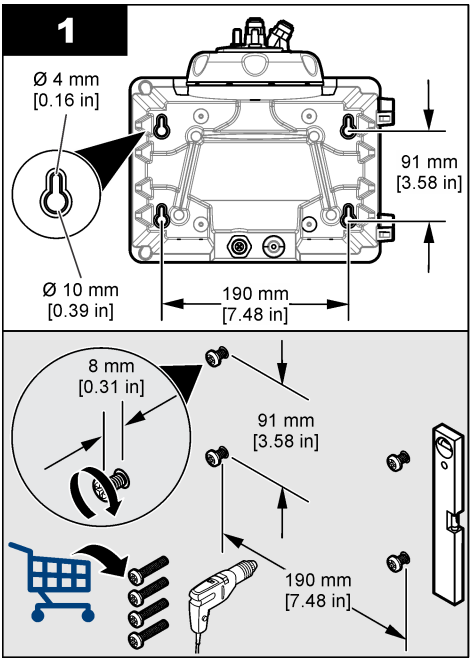

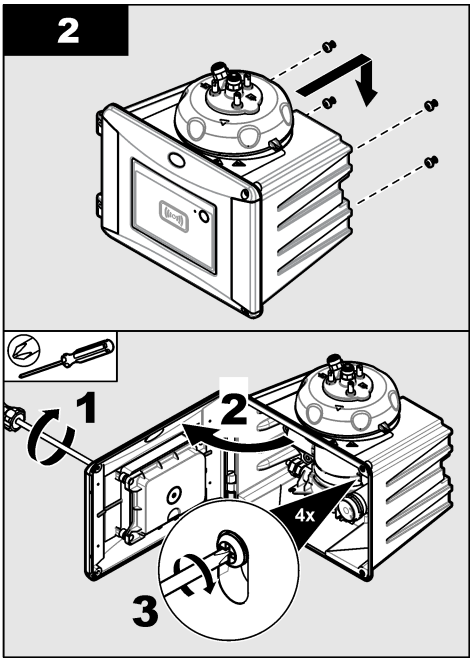

3.4 Install the desiccant cartridge

NOTICE
Make sure that the desiccant cartridge is installed or damage to the instrument will occur.

For initial installation, complete the steps below. For replacement, refer to the documentation supplied with the desiccant cartridge.

1. Look at the install by date on the packaging. Refer to Figure 4. Do not use if the current date is past the install by date.
2. Make sure that the indicator on the new desiccant cartridge is light blue. Refer to Figure 4.
3. Install the new desiccant cartridge. Refer to the illustrated steps that follow.

Figure 4 Examine the desiccant cartridge

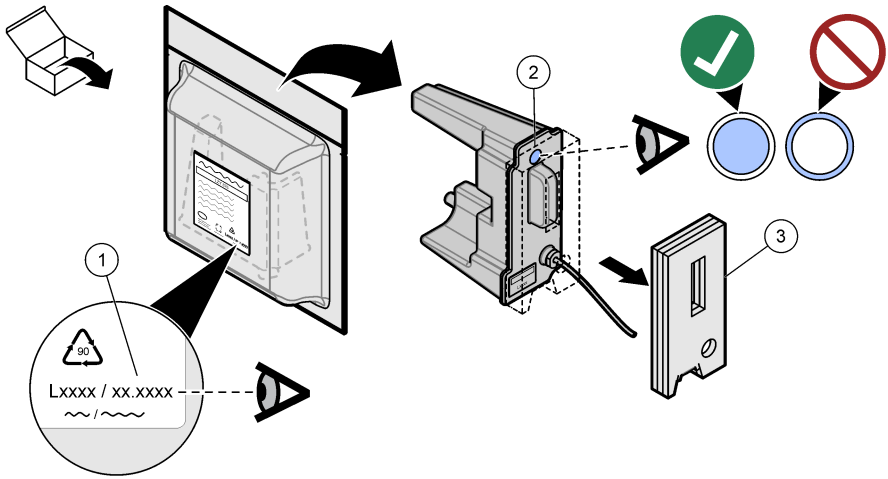

1 Install by date (mm.yyyy = month and year)	**2** Indicator (light blue = not expired, white = expired)	**3** Transport safety protection

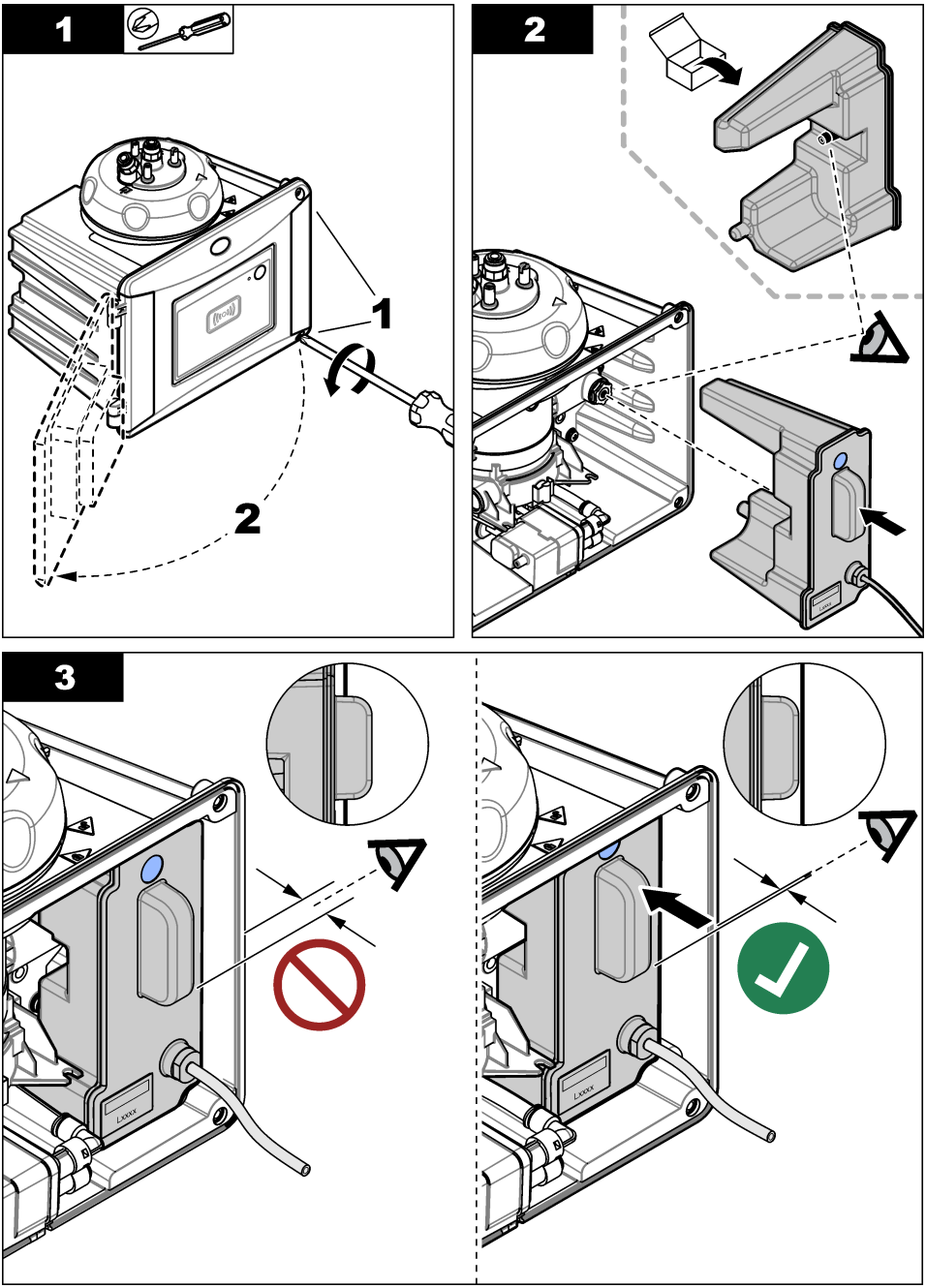
1
1
2
2
3
L-XXXX
L-XXXX

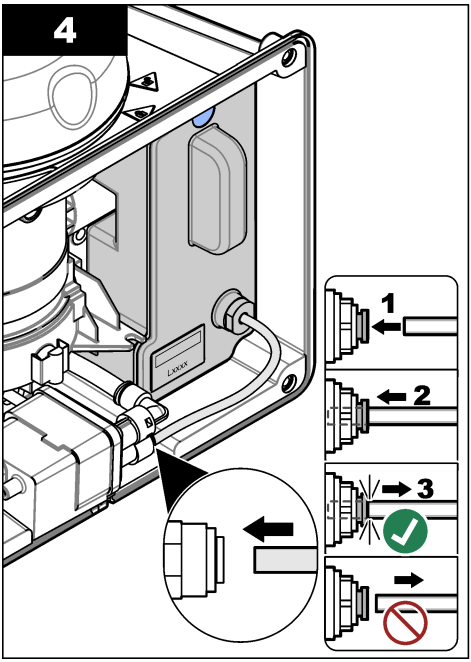

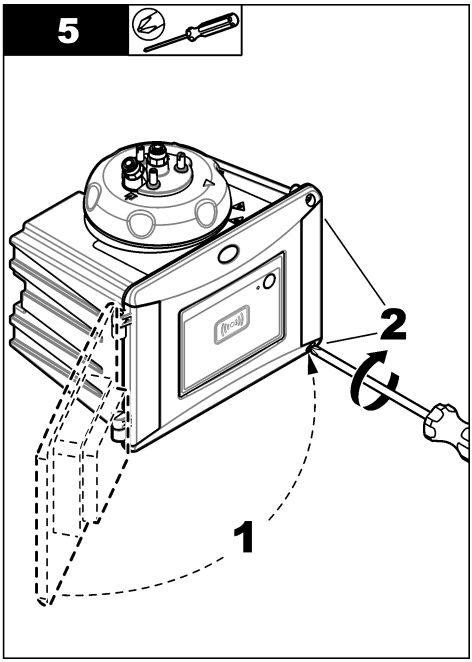

3.5 Replace the cleaning lid screws

NOTICE

Do not overtighten the screws or breakage will occur. Hand tighten the screws.

If the sample temperature is 40 to 60 °C (104 to 140 °F), the cleaning lid screws will become hot. To prevent burns, replace the standard cleaning lid screws with the cleaning lid screws and washers for hot water. Refer to Figure 1 on page 9 for the location of the cleaning lid screws.

3.6 Install the service bracket

The service bracket holds the process head (or the optional automatic cleaning module) when it is not installed on the instrument.

Refer to Installation overview on page 11 to install the service bracket the correct distance from the instrument. Refer to the illustrated steps that follow to install the service bracket.

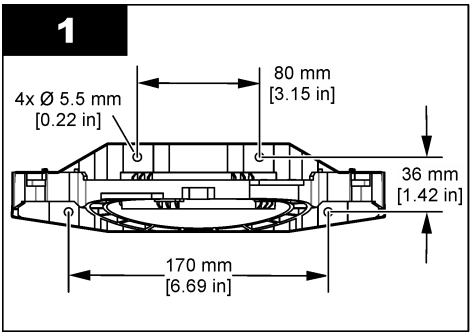

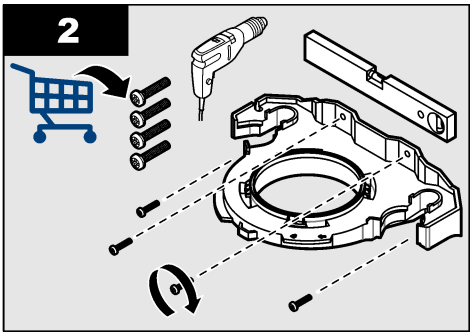

3.7 Install the flow sensor (optional)

The optional flow sensor identifies if the sample flow is within specifications. A warning shows on the controller display and the status indicator light when a no flow, low flow or high flow warning occurs.

Install the optional flow sensor. Refer to the documentation supplied with the optional flow sensor.

3.8 Install the automatic cleaning module (optional)

The automatic cleaning module cleans the inside of the process vial at a selected time interval. Install the optional automatic cleaning module. Refer to the documentation supplied with the automatic cleaning module.

3.9 Connect to an SC controller

⚠ CAUTION	
	Personal injury hazard. Do not look into the vial compartment when the instrument is connected to power.

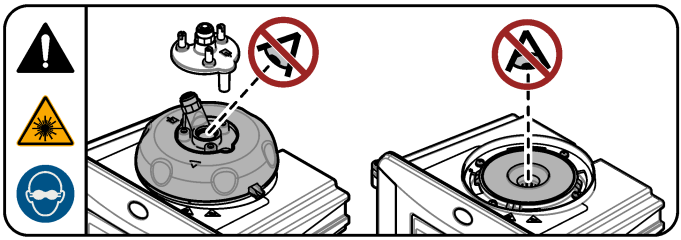

1. Get the latest software version from www.hach.com. Install the latest software version on the SC controller before the instrument is connected to the SC controller.

   Refer to the software installation instructions supplied in the box or supplied in the software download for the SC controller.
2. Remove power to the SC controller.
3. Connect the sensor cable to the quick-connect fitting of the SC controller. Refer to Figure 5. Keep the connector cap for later use.
4. Supply power to the SC controller.

   The SC controller looks for the instrument.
5. When the SC controller finds the instrument, push **enter**.

   On the main screen, the controller shows the turbidity value measured by the turbidimeter.

Figure 5 Connect the sensor cable to the SC controller

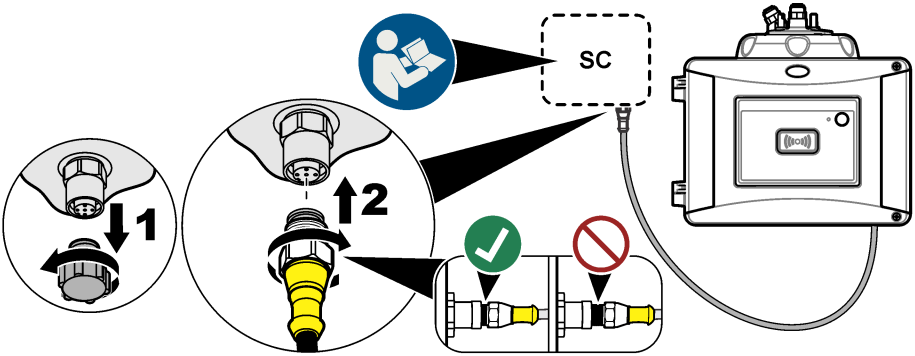

3.10 Plumbing

3.10.1 Plumb the instrument

⚠ WARNING

Explosion hazard. Make sure that the drain tube is free of all obstructions. If the drain tube has a blockage or is pinched or bent, high pressure can build up in the instrument.

⚠ WARNING

Personal injury hazard. The sample line contains water under high water pressure that can burn skin if hot. Qualified personnel must remove the water pressure and wear personal protective equipment during this procedure.

NOTICE

Do not let water get in the vial compartment or instrument damage will occur. Before the process head is installed on the instrument, make sure that there are no water leaks. Make sure that all tubing is fully seated. Make sure that the vial nut is tight. The full water pressure should be on the system, the water flow is on and no water leak on the glass vial is seen.

NOTICE

Hold the automatic cleaning module vertically when it is installed on the instrument or the vial can break. If the vial breaks, water will get in the vial compartment and instrument damage will occur.

NOTICE

Before the instrument is plumbed, make sure that the desiccant cartridge and vial are installed.

NOTICE

Based on the environmental conditions, is necessary to wait a minimum of 15 minutes to let the system become stable.

Items supplied by the user:

- Flow shutoff valve

- Tubing[7]
- Tubing cutter

1. Plumb the instrument. Refer to the illustrated steps that follow and Figure 6.

   Note: *To plumb the instrument with accessories, refer to the documentation supplied with the accessories.*

   Note: *Use the opaque tubing accessory supplied from HACH accessory to prevent the bacteria growth.*

Figure 6 Plumbing overview – no accessories

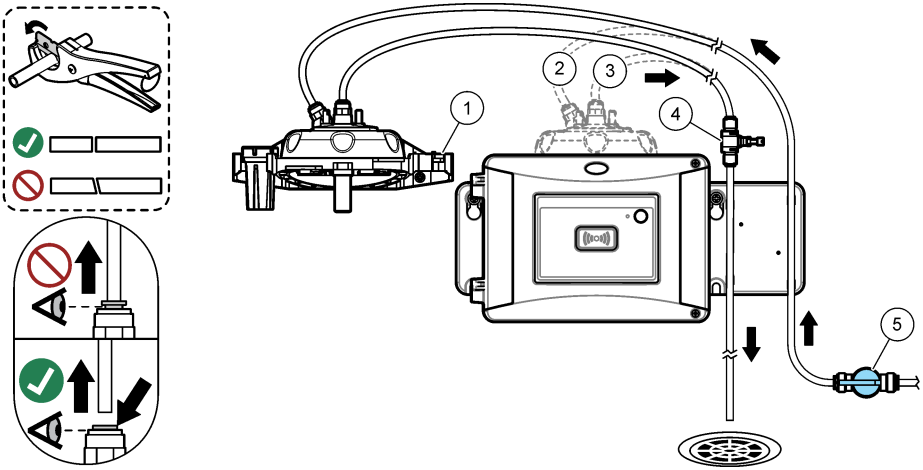

1	Service bracket	**4**	Flow regulator
2	Sample inlet	**5**	Flow shutoff valve
3	Sample outlet		

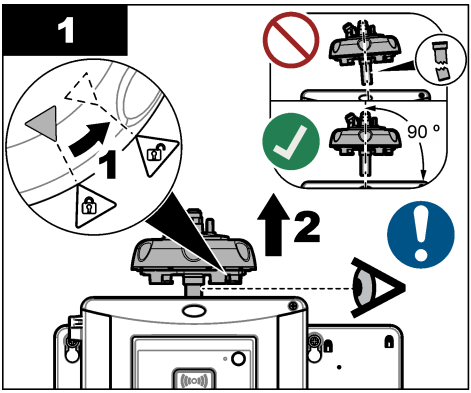

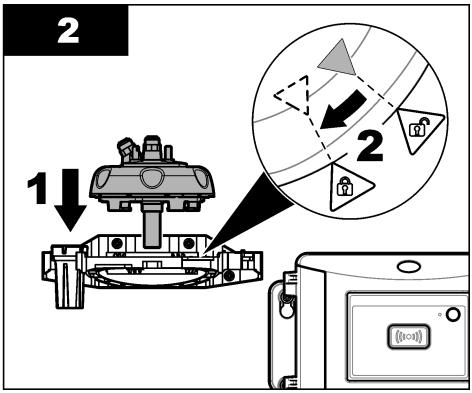

[7] Refer to Specifications on page 3 for the tubing requirements.

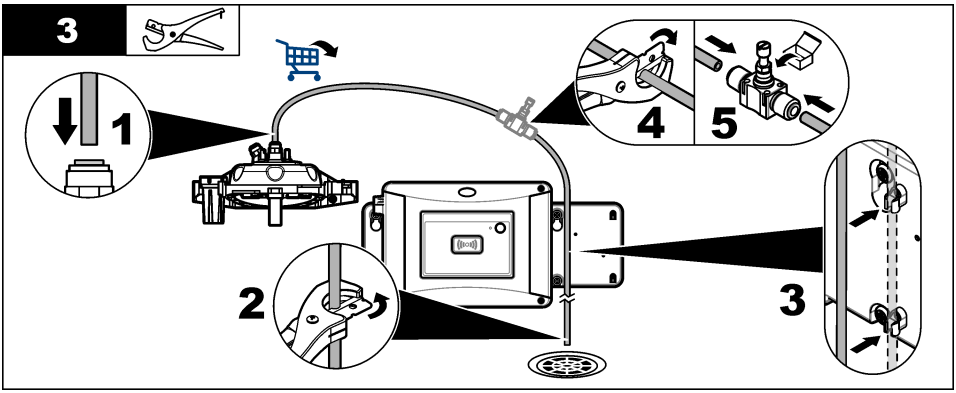
3
1
2
4
5
3

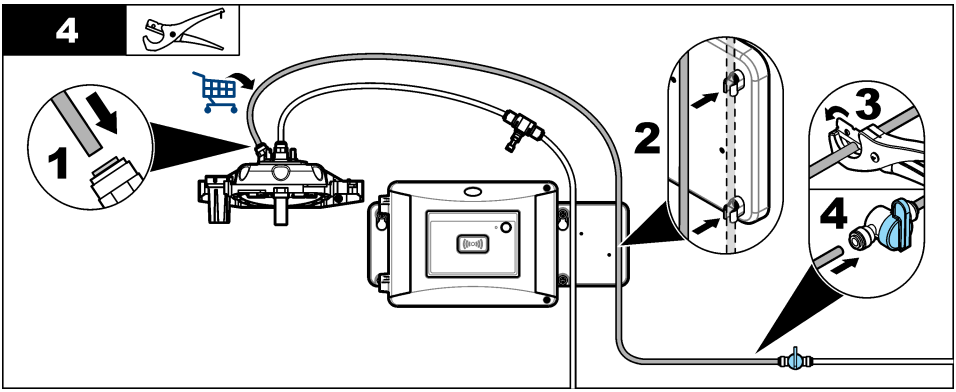
4
1
2
3
4

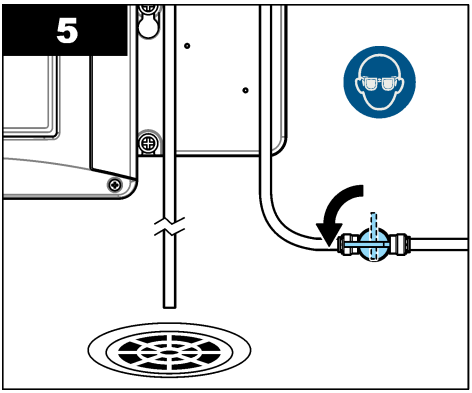
5

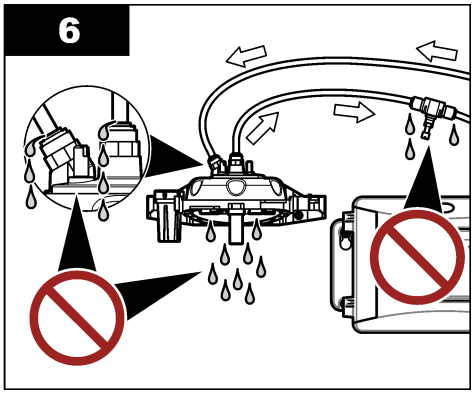
6

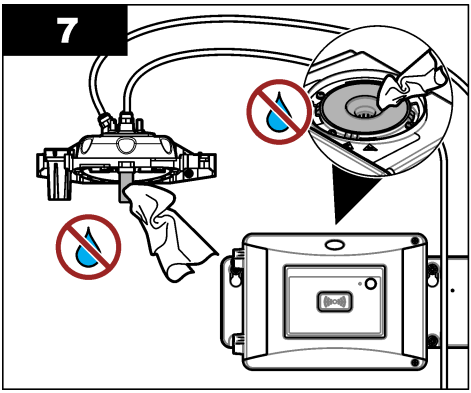

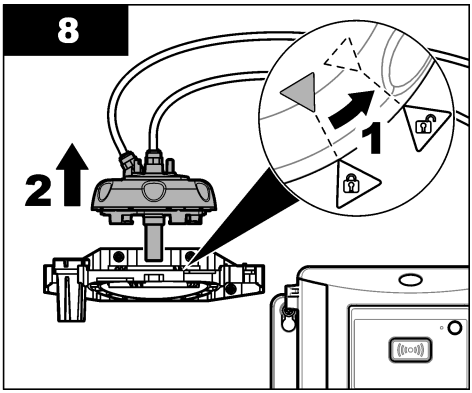

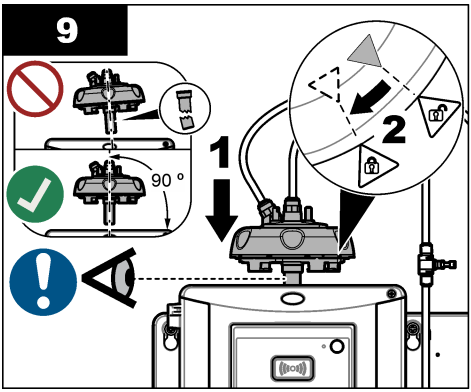

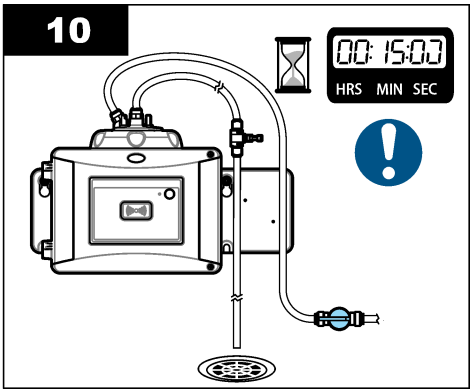

3.10.2 Set the flow rate

1. Measure the flow with the flow regulator fully open. Make sure that the flow is in the middle of the flow specification. Refer to Specifications on page 3.
2. Slowly close the flow regulator until the flow decreases by 20 to 30%.
   Note: *The flow regulator causes back pressure in the tubing and decreases the quantity of bubbles that can form in the vial.*

Section 4 User navigation

Refer to the controller documentation for keypad description and navigation information.

Push the **RIGHT** arrow key on the controller multiple times to show more information on the home screen and to show a graphical display.

Section 5 Operation

5.1 Configure the instrument

Select the location name, signal averaging, measurement units, resolution, bubble reject, logger interval, programmable button function and more.

1. Push **menu**.
2. Select SENSOR SETUP>TU5x00 sc>CONFIGURE.
3. Select an option.

Option	Description
LOCATION	Sets the name or location of the sample source. The name or location entered shows on the measurement screen (16 characters maximum, default: serial number).
SIGNAL AVG	When enabled, the turbidity reading that shows on the controller display is an average of the values measured during the time interval selected. TU5300 sc options: 30–90 seconds; TU5400 sc options: 1–90 seconds (default: 30 seconds). ***Note:*** *The manufacturer recommends that the Signal Average setting be set to 30 seconds or less because of the fast response of the instrument.*
MEAS UNITS	Selects the measurement units that show on the controller display and that are recorded to the data log. TU5300 sc options: NTU, FNU, TE/F, EBC or FTU. TU5400 sc options: NTU, mNTU, FNU, mFNU, TE/F, EBC, FTU or mFTU. Default: NTU.
RESOLUTION	Selects the number of decimal places that show on the controller display. Options: 0.001 or 0.0001. TU5300 sc default: 0.001. TU5400 sc default: 0.0001.
BUBBLE REJECT	Sets the bubble reject to on (default) or off. When set to on, high turbidity readings caused by bubbles in the sample are not shown or saved to the data log.
LOGGER INTERVAL	Sets the frequency that the turbidity reading is saved to the data log. Options: 5 or 30 seconds or 1, 2, 5, 10 (default), 15 or 30 minutes.
CLEANING	Configures the optional automatic cleaning module settings. Refer to the documentation supplied with the automatic cleaning module to configure the CLEANING setting. This option only shows when CLEANING MODULE is set to ON.
SET DEFAULTS	Sets the instrument settings to the factory defaults.
BUTTON FUNCTION	Sets the function of the programmable button. Refer to Figure 1 on page 9. **SERVICE**—When the button is pushed, changes the output mode to HOLD if the output mode is currently ACTIVE and changes the output mode to ACTIVE if the output mode is currently HOLD. **LINK2SC**—When the button is pushed, makes a Link2SC job file. Refer to Compare measurements with Link2SC on page 26. **OFF** (default) —Disables the button. In addition, when CLEANING MODULE is set to ON, the options that follow show. **START WIPE**—When the button is pushed, start a wiper cleaning cycle. **WIPER REPLACE**—When the button is pushed, puts the wiper in the position for wiper replacement.
FLOW SENSOR	Enables or disables the flow signal to show on the measurement screen and the DIAG/TEST>SIGNALS screen. Enables or disables flow signal warnings and errors to occur. When the optional flow sensor is installed, set to ON (default: OFF).

Option	Description
CLEANING MODULE	Enables or disables the automatic cleaning module menu options. When the optional automatic cleaning module is installed, set to ON (default: OFF). When this option is set to ON, the START WIPE option shows in the main SENSOR SETUP menu.
AUTO-CHECK	Sets the time interval and sensitivity of the automatic system check. This option only shows when the instrument has the automatic system check option. **CHECK INTERVAL**—Sets the time interval between automatic system checks. The automatic system check examines the condition of the vial. If the condition of the vial is bad, a warning message shows on the controller display. Options: OFF, 1, 2 (default), 3, 6, 12 hours or 1 day. **SENSITIVITY**—Sets the sensitivity of the automatic system check to the condition of the vial. Options: HIGH or LOW (default).

5.2 Show instrument information

Show instrument information and the instrument status to get diagnostic information.

1. Push **menu**.
2. Select SENSOR SETUP>TU5x00 sc>DIAG/TEST.
3. Select an option.

Option	Description
SENSOR INFO	Shows the sensor name, location, serial number, type (EPA or ISO), model number, software version and measurement device version.
SIGNALS	Shows real-time values for turbidity, flow rate[8], the humidity set point and the air system humidity and temperature. Shows the vial condition (condensation and clarity) and the vial status (installed or not installed). Shows the lid type installed (calibration lid or process head).
COUNTERS	Shows the total operational time of the instrument, remaining number of wiper cycles, date the vial was installed/replaced, date the vial was cleaned, date of calibration, date of verification, operational time of the desiccant, remaining desiccant life, operational time of the air pump and date factory service was done. ***Note:*** *The counters are reset when menu-guided maintenance is done. Refer to the MAINTENANCE option that follows.*
MAINTENANCE	Starts menu-guided maintenance to replace or clean the vial, replace the wiper or replace the desiccant cartridge. **START WIPE**—Starts a wiper cleaning when the optional automatic cleaning module is installed. **OUTPUT MODE**—Selects the output behaviour during maintenance (default: HOLD). **FACTORY SERVICE**—For service use only.

5.3 Compare process and laboratory measurements

Compare process and laboratory measurements with RFID or Link2SC. Make sure that the process and lab instrument are calibrated with the same number of calibration points and with the same standards. Make sure that the calibrations are not expired.

[8] A value less than 0.1 shows if the optional flow sensor is not installed.

5.3.1 Collect a grab sample

Collect a 100-mL sample (minimum) from the sample outlet tubing of the process instrument. Collect the sample in a clean glass bottle with a tight-fitting cap. Do not collect samples directly into a sample vial.

1. Rinse the glass bottle a minimum of three times with water from the sample outlet tubing of the process instrument. Let the bottle overflow with the sample.
2. Collect a 100-mL sample (minimum) in the glass bottle from the sample outlet tubing of the process instrument.
3. Put the cap on the sample bottle.
4. Analyze the grab sample immediately with the laboratory instrument to prevent settling, bacteria growth and temperature changes.

5.3.2 Compare measurements with RFID

When the process instrument and laboratory instrument have the optional RFID module, compare process and laboratory measurements with RFID.

Items to collect:

- TU5300 sc or TU5400 sc with the optional RFID module
- TU5200 with the optional RFID module
- TU5200 sample vials
- Glass sample bottle with a sample RFID sticker
- Operator RFID tag (optional)

1. At the process instrument, put the operator RFID tag (if available) near the RFID module. Refer to Figure 1 on page 9 for the location of the RFID module.
2. Put a sample RFID sticker on the sample bottle.
3. Collect a grab sample. Refer to Collect a grab sample on page 25.
4. At the process instrument, put the RFID sticker that is on the sample bottle near the RFID module.

   The instrument gives a sound signal. The status indicator light changes to blue.

   The turbidity reading, operator ID (if available), location of the process instrument and the date and time are recorded on the RFID sticker.
5. Move the grab sample bottle to the laboratory instrument.
6. On the TU5200, push **Options**>**Reading Setup**.
7. Push **Bubble Reject**, then set bubble reject to on.
8. If the grab sample is 1 NTU or less, push **Reading**>**Minimum Mode**, then select 60 seconds.

   Note: *In minimum mode, readings are done continuously for 60 seconds when a measurement is done. The smallest reading within 60 seconds is saved to the data log.*
9. At the laboratory instrument, put the operator RFID tag (if available) near the RFID module to log in.
10. Put the RFID sticker that is on the sample bottle near the RFID module.

    The instrument gives a sound signal. The turbidity reading from the process instrument shows on the display.
11. Prepare a grab sample vial. Refer to *Prepare a sample vial* in the TU5200 documentation.
12. Measure the turbidity of the grab sample with the laboratory instrument. Refer to the TU5200 documentation.

    If the difference between the process and laboratory measurements is not more than the selected acceptance range, "Measurement values match." shows on the display. Refer to the TU5200 documentation to select the acceptance range.

    If "Measurement values do not match." shows on the display, click the link to show the troubleshooting steps.

13. To show the compare log, push **Options**>**Compare Log**. Refer to the TU5200 documentation for more options.
14. To send the verification data to external devices that are connected to the instrument, push **Options**>**Send Data**. Refer to the TU5200 documentation for more options.

5.3.3 Compare measurements with Link2SC

When the process instrument and laboratory instrument do not have the optional RFID module, compare the process and laboratory measurements with Link2SC.

Items to collect:

- TU5300 sc or TU5400 sc
- TU5200
- TU5200 sample vials
- SD card[9] (or a LAN connection at the SC controller[10] and the laboratory instrument[11])
- USB adapter for the SD card (if used)

1. Collect a grab sample. Refer to Collect a grab sample on page 25.
2. If the SC controller and laboratory instrument do not have a LAN connection, install the SD card in the SC controller. Refer to the SC controller documentation to install the SD card.
3. At the SC controller, make a Link2SC job file as follows:
   a. Push **menu**.
   b. Select LINK2SC>CREATE A NEW JOB>TU5x00 sc.
   The SC controller makes a Link2SC job file. The turbidity reading, operator ID (if available), location of the process instrument and the date and time are recorded to the job file.

   In addition, the temperature, calibration settings, bubble reject setting, vial clarity and desiccant cartridge life are recorded to the Link2SC job file.
4. Push **OK**, then **YES**.
5. Select JOB>LAB.
   The Link2SC job file is saved to the SD card (if available) or sent to the laboratory instrument (when the SC controller and laboratory instrument have a LAN connection).

   To see the Link2SC job files on the SD card, select JOBS FROM CARD.
6. If the SC controller and laboratory instrument do not have a LAN connection, complete the steps that follow.
   a. Remove the SD card from the SC controller.
   b. At the laboratory instrument, put the SD card in the USB adapter. Then put the USB adapter in a USB port type A on the laboratory instrument.
7. Move the grab sample bottle to the laboratory instrument.
8. On the TU5200, push **Options**>**Reading Setup**.
9. Push **Bubble Reject**, then set bubble reject to on.
10. If the grab sample is 1 NTU or less, push **Reading**>**Minimum Mode**, then select 60 seconds.

    Note: *In minimum mode, readings are done continuously for 60 seconds when a measurement is done. The smallest reading within 60 seconds is saved to the data log.*
11. At the laboratory instrument, push the **LINK2SC** to show the job list.
12. Select the latest Link2SC job file.

    The turbidity measurement from the process instrument shows on the right side of the display.
13. Prepare a grab sample vial. Refer to *Prepare a sample vial* in the TU5200 documentation.

---

[9] Refer to the SC controller documentation for the SD card requirements.
[10] Refer to the SC controller documentation to set up a LAN connection at the SC controller.
[11] Refer to the TU5200 documentation to set up a LAN connection at the laboratory instrument.

14. Measure the turbidity of the grab sample with the laboratory instrument. Refer to the TU5200 documentation.

    If the difference between the process and laboratory measurements is not more than the selected acceptance range, "Measurement values match." shows on the display. Refer to to select the acceptance range.

    If "Measurement values do not match." shows on the display, click the link to show the troubleshooting steps.

15. To show the compare log, push **Options**>**Compare Log**. Refer to the TU5200 documentation for more options.

16. To send the verification data to external devices that are connected to the instrument, push **Options**>**Send Data**. Refer to the TU5200 documentation for more options.

5.3.3.1 Configure the Link2SC settings

Select the acceptance range permitted when process and laboratory measurements are compared with Link2SC.

1. Push **menu**.
2. Select SENSOR SETUP>TU5x00 sc>LINK2SC.
3. Select an option.

Option	Description
ACCEPT. UNIT	Sets the units used to compare the process and laboratory measurements. Options: %, NTU or LAB. Select LAB when the acceptance range is supplied by the laboratory instrument.
ACCEPT. RANGE	Sets the maximum difference permitted between the process and laboratory measurements. Options: 1 to 50% (default: 10%). This option only shows when ACCEPT. UNIT is set to % or NTU.

Section 6 Calibration

⚠ WARNING

Chemical exposure hazard. Obey laboratory safety procedures and wear all of the personal protective equipment appropriate to the chemicals that are handled. Refer to the current safety data sheets (MSDS/SDS) for safety protocols.

When the instrument is used for US EPA regulatory reporting, calibrations must be done according to US EPA guidance documents and methodologies. Contact local regulating authorities for additional compliance regulations.

The instrument is factory calibrated and the laser light source is stable. The manufacturer recommends that a calibration verification be done periodically to make sure that the system operates as intended. The manufacturer recommends calibration as local regulations require and after repairs or comprehensive maintenance work.

Use the optional calibration lid and a vial(s) with a StablCal standard or Formazin standard to calibrate the instrument. Refer to the Calibration lid documentation for more calibration procedures with and without RFID vials, 1-point and 2-point calibrations. As an alternative, use a syringe and StablCal standard or Formazin standard to calibrate the instrument.

6.1 Configure the calibration settings

Select the calibration curve, calibration interval, output behavior during calibration and more.

1. Push **menu**.
2. Select SENSOR SETUP>TU5x00 sc>CALIBRATION>SETUP.
3. Select an option.

Option	Description
MENU GUIDED	Sets menu-guided calibration to SEALED VIAL, SYRINGE or OFF (default). Calibration instructions show on the controller display[12] during calibration when set to SEALED VIAL or SYRINGE. ***Note:*** *The MENU GUIDED option does not show when sealed vials with RFID are used.*
CAL CURVE[13]	Selects the type of standard and the calibration curve (range). **STABLCAL 0–40 NTU** (default)—1-point calibration (20 NTU) with StablCal. **STABLCAL 0–700 NTU**—2-point calibration (20 NTU and 600 NTU) with StablCal. **FORMAZIN 0–40 NTU**—2-point calibration (20 NTU and dilution water) with Formazin. **FORMAZIN 0–700 NTU**—3-point calibration (20 NTU and 600 NTU and dilution water) with Formazin. **CUSTOM**—2- to 6-point calibration (0.02 to 700 NTU) with StablCal or Formazin. The user selects the number of calibration points and the value of each calibration point.
VER AFTER CAL	Sets the instrument to start a verification immediately after the instrument is calibrated. When set to on, the verification standard is measured immediately after a calibration is done. Refer to Configure the verification settings on page 39.
CAL REMINDER	Sets the time interval between calibrations. The controller will show a reminder when a calibration is due. When a calibration is done, the calibration time is set to zero. Options: OFF(default), 1 day, 7 days, 30 days or 90 days.
OUTPUT MODE	Selects the output behavior during calibration. **ACTIVE**—The outputs continues to give the measurement values during calibration. **HOLD** (default)—Keeps the outputs at the last measurement value before calibration. The outputs give the measurement values again when the calibration procedure is complete. **SET TRANSFER**—Sets the outputs to the SET TRANSFER value selected in the controller settings. Refer to the controller setting for more information.
CAL POINTS	When the CAL CURVE setting is set to CUSTOM, this option sets the number of calibration points (2 to 6). This option only shows when the CAL CURVE setting is set to CUSTOM.
SET FACT CAL	Sets the calibration settings to the factory defaults.

[12] Or the Claros user interface for Claros controllers without a display.

[13] Select the correct setting for the calibration with StablCal vials with RFID procedure. Refer to the applicable section of this manual.

6.2 Calibrate with a syringe

Pre-requisite: Configure the calibration settings. Refer to Configure the calibration settings on page 28.

⚠ WARNING

Chemical exposure hazard. Obey laboratory safety procedures and wear all of the personal protective equipment appropriate to the chemicals that are handled. Refer to the current safety data sheets (MSDS/SDS) for safety protocols.

Items to collect:

- StablCal standard or prepared Formazin standard at the same ambient temperature as the sensor
- Calibration syringe and tubing

To prepare a Formazin standard(s), refer to Prepare Formazin standards on page 31. To make 4000-NTU Formazin stock solution, refer to Make 4000-NTU Formazin stock solution on page 31.

1. Push **menu**.
2. Select SENSOR SETUP>TU5x00 sc>CALIBRATION>SETUP>MENU GUIDED>SYRINGE.
3. Select SENSOR SETUP>TU5x00 sc>CALIBRATION>START.
4. Complete the steps shown on the display.
   Refer to the illustrated steps that follow to complete the steps shown on the display.

   At illustrated step 4, enter the measured turbidity value of the standard. If the standard value that shows on the display is correct, push confirm. The status indicator light changes to blue.

   At illustrated step 15, fully open the flow regulator. Then slowly close the flow regulator until the flow decreases by 20 to 30%.

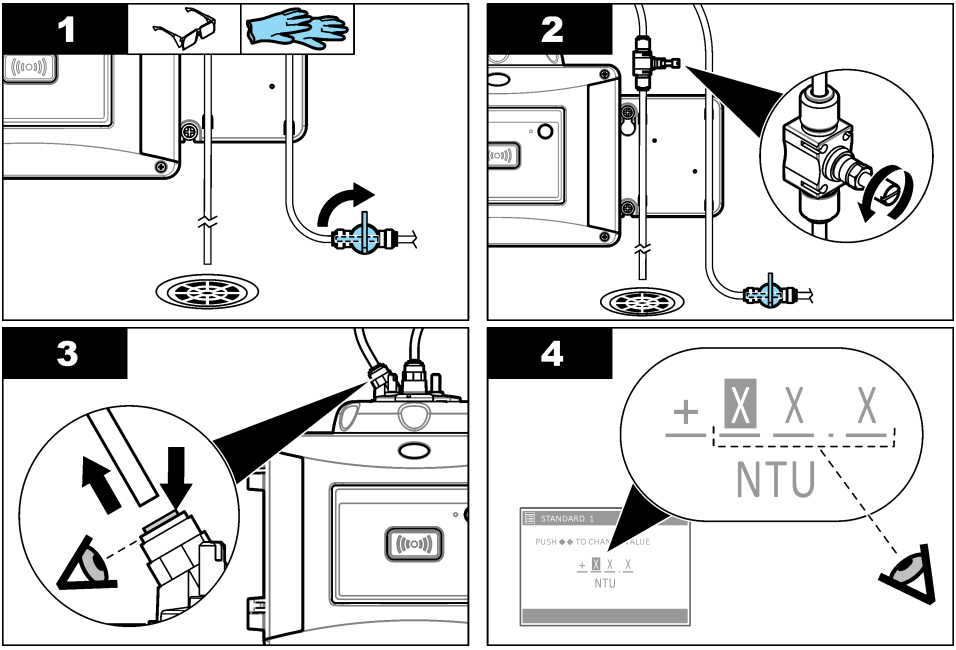

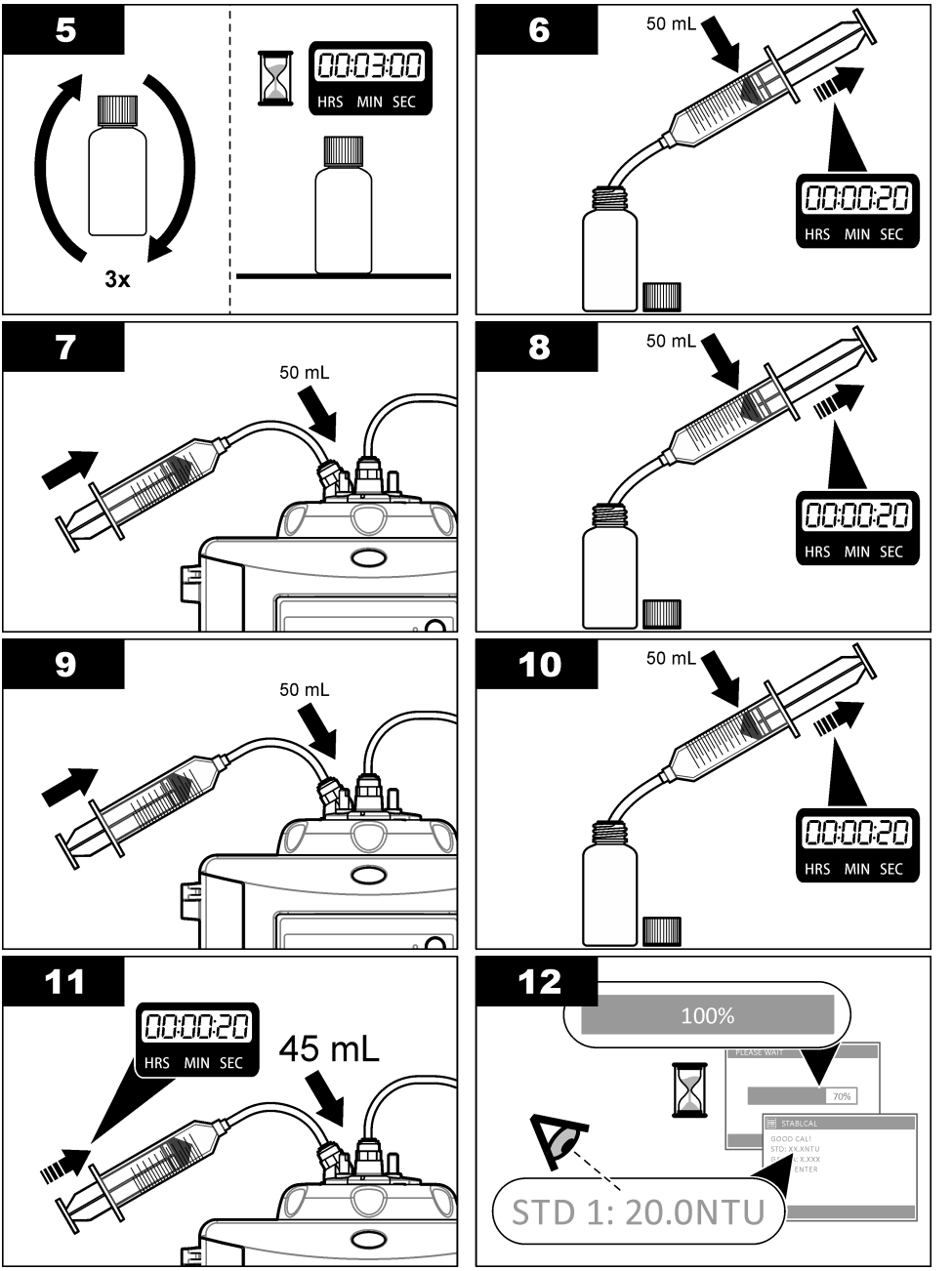
5
3x
00:03:00
HRS MIN SEC
6
50 mL
00:00:20
HRS MIN SEC
7
50 mL
8
50 mL
00:00:20
HRS MIN SEC
9
50 mL
10
50 mL
00:00:20
HRS MIN SEC
11
00:00:20
HRS MIN SEC
45 mL
12
100%
70%
STABLCAL
GOOD CALI
STD: XX.XNTU
ENTER
STD 1: 20.0NTU

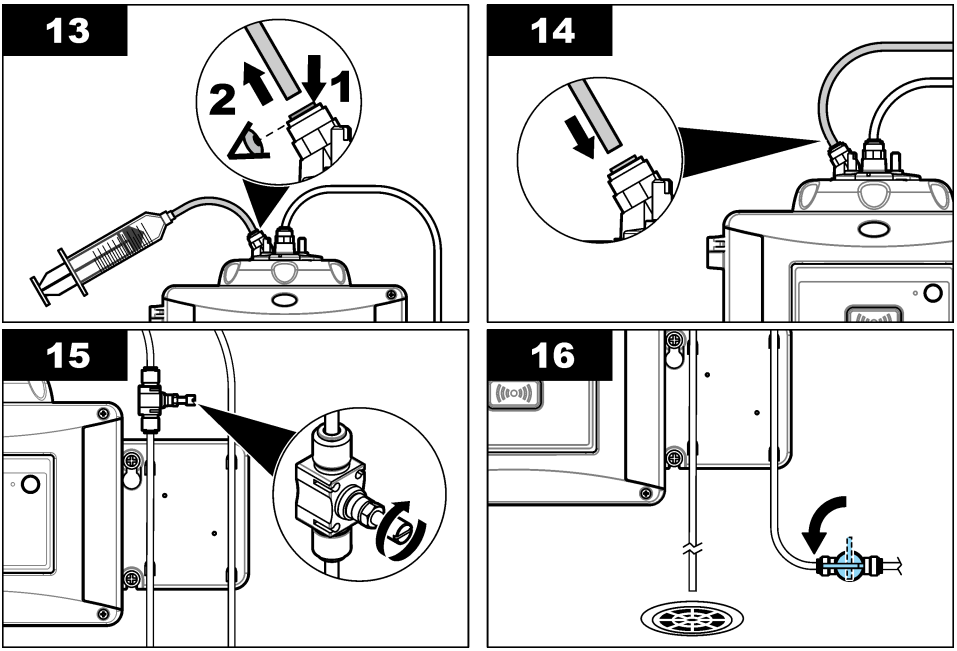

6.2.1 Make 4000-NTU Formazin stock solution

⚠ WARNING

Chemical exposure hazard. Obey laboratory safety procedures and wear all of the personal protective equipment appropriate to the chemicals that are handled. Refer to the current safety data sheets (MSDS/SDS) for safety protocols.

Note: *The manufacturer recommends that Formazin stock solution is not made from raw materials. Preparation of Formazin stock solution is temperature and technique sensitive. Use Hach Formazin stock solution to get the best instrument performance and analytical standard accuracy.*

1. Dissolve 5.000 grams of reagent grade hydrazine sulfate ($(NH_2)_2$–H_2SO_4) in about 400 mL of demineralized water.
2. Dissolve 50.000 grams of reagent grade hexamethylenetetramine in approximately 400 mL of demineralized water.
3. Quantitatively, pour the two solutions in a 1-liter volumetric flask, and dilute to volume with demineralized water. Mix fully.
4. Let the solution stand for 48 hours at 25 ± 1 °C (77 ± 1 °F).

6.2.2 Prepare Formazin standards

Prepare Formazin standards immediately before a calibration and discard after use.

1. Prepare a 20 NTU Formazin standard as follows:
   a. Use a pipet to add 5.0 mL of 4000 NTU Formazin standard solution in a 1-L volumetric flask.

b. Dilute to the mark with deionized water or distilled water with a turbidity of less than 0.5 NTU. Put in the stopper and mix well.

2. When the sample turbidity range is 40 to 700 NTU[14], prepare a 600 NTU Formazin standard as follows:

   a. Use a pipet to add 15.0 mL of 4000 NTU Formazin standard solution in a 100-mL volumetric flask.
   b. Dilute to the mark with deionized water or distilled water with a turbidity of less than 0.5 NTU. Put in the stopper and mix well.

6.3 1-point calibration without verification

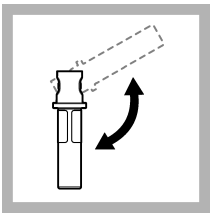

1. Invert the 20 NTU StablCal vial for 2 to 3 minutes. Refer to the documentation supplied with the StablCal vials.

2. Clean and dry the vial with a no-lint cloth. Refer to Prevent vial contamination on page 34.

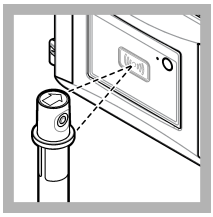

3. Put the 20 NTU vial in front of the RFID module. A beep sound is heard and the status indicator light flashes blue. If the status indicator light does not flashes blue refer to Troubleshooting on page 34.
The instrument records the value, the lot number, the expiration date and the Certificate of Analysis information from the RFID vial to the data log.

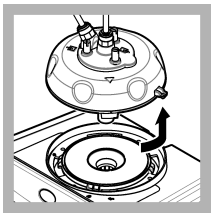

4. Remove the process head (or the automatic cleaning module).

[14] 1 mNTU = 0.001 NTU

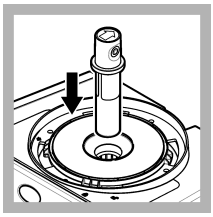

5. Put the 20 NTU vial in the vial compartment.

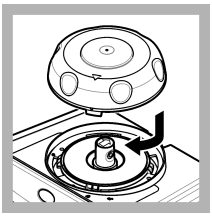

6. Install the calibration lid. Make sure that the calibration lid is in the closed position.

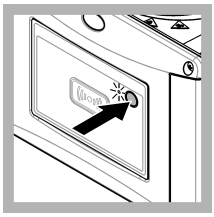

7. Push the button on the front of the instrument.

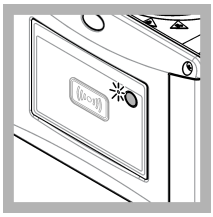

8. Wait 30 to 60 seconds for the measurement to complete. The status indicator light slowly flashes blue during the measurement.

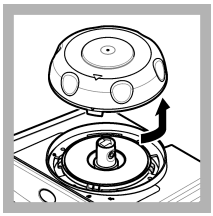

9. When the status indicator light flashes green, remove the calibration lid.

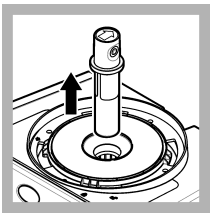

10. Remove the vial.

11. Make sure that there is no water on the process head (or the automatic cleaning module). Dry all possible spills to prevent water ingress on the vial compartment.

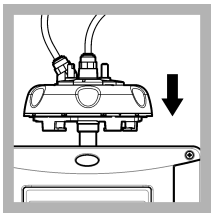

12. Hold the process head (or automatic cleaning module) vertically when it is installed on the instrument or the vial can break.

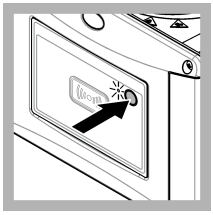

13. Push the button on the front of the instrument to save the calibration value. The status indicator light stays green.

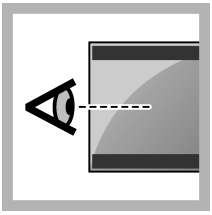

14. Examine the calibration data on the controller menu or the Claros user interface.

6.3.1 Troubleshooting

6.3.1.1 Status indicator light

Problem	Possible cause	Solution
The status indicator light does not change.	RFID communication failure	Make sure that the TU5x00 has an RFID reader.
		Make sure that the StablCal vial is an RFID cuvette.
		The RFID tag of the cuvette is defective.
The status indicator light flashes red.	The calibration setting is not correct.	Make sure that the calibration setting is configured with STABL CAL.
	The cuvette has expired.	Use a new cuvette.

6.3.2 Prevent vial contamination

NOTICE

Do not to touch or scratch the glass of the sample vial. Contamination or scratches on the glass can cause measurement errors.

The glass must stay clean and have no scratches. Use a no-lint cloth to remove dirt, fingerprints or particles from the glass. Replace the sample vial when the glass has scratches.

Refer to Figure 7 to identify where not to touch the sample vial. Always keep the sample vials in the vial stand to prevent contamination on the bottom of the vial.

Figure 7 Sample vial overview

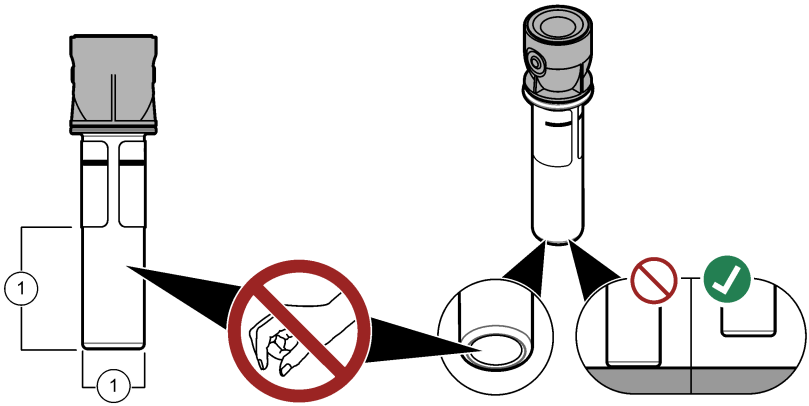

1	Measurement surface—Do not touch.

6.4 Calibrate with vials without RFID

6.4.1 Make 4000-NTU Formazin stock solution

⚠ WARNING

Chemical exposure hazard. Obey laboratory safety procedures and wear all of the personal protective equipment appropriate to the chemicals that are handled. Refer to the current safety data sheets (MSDS/SDS) for safety protocols.

Note: *The manufacturer recommends that Formazin stock solution is not made from raw materials. Preparation of Formazin stock solution is temperature and technique sensitive. Use Hach Formazin stock solution to get the best instrument performance and analytical standard accuracy.*

1. Dissolve 5.000 grams of reagent grade hydrazine sulfate ($(NH_2)_2$–H_2SO_4) in about 400 mL of demineralized water.
2. Dissolve 50.000 grams of reagent grade hexamethylenetetramine in approximately 400 mL of demineralized water.
3. Quantitatively, pour the two solutions in a 1-liter volumetric flask, and dilute to volume with demineralized water. Mix fully.
4. Let the solution stand for 48 hours at 25 ± 1 °C (77 ± 1 °F).

6.4.2 Prepare the standard vial(s)

⚠ CAUTION

Chemical exposure hazard. Dispose of chemicals and wastes in accordance with local, regional and national regulations.

NOTICE

Always put a cap on the sample vial to prevent spills in the vial compartment.

To use sealed vials for calibration, immediately go to Calibration procedure—vials without RFID on page 37. To use unsealed vials for calibration, prepare the standard vial(s) as follows:

1. For formazin calibration, prepare the formazin standards with 4000-NTU formazin stock solution. Refer to Prepare Formazin standards on page 31.

   Note: *To make 4000-NTU formazin stock solution, refer to* Make 4000-NTU Formazin stock solution *on page 31.*

2. Prepare the standard vial(s). Refer to the illustrated steps that follow.

   - **FORMAZIN 0–40 NTU (or 0–40 FNU) calibration**—Two vials: formazin 20 NTU and dilution water[15] used to prepare the formazin standard.
   - **FORMAZIN 0–700 NTU (or 0–1000 FNU) calibration**—Three vials: formazin 20 NTU, formazin 600 NTU and the dilution water[15] used to prepare the formazin standards
   - **STABLCAL 0-40 NTU (or 0–40 FNU) calibration**—One vial: StablCal 20 NTU
   - **STABLCAL 0-700 NTU (or 0–1000 FNU) calibration**—Two vials: StablCal 20 NTU and StablCal 600 NTU

   Make sure that the standard is at the same ambient temperature as the sensor.

   If there is contamination in the sample vial after it is rinsed with the sample, clean the sample vial. Refer to the TU5200 documentation for vial cleaning instructions.

[15] Make sure that the vial contains dilution water for a minimum of 12 hours before the procedure.

If calibration with verification is used, make sure to measure the verification standard with the menu item **Define Std Val**. Refer to Configure the verification settings on page 39.

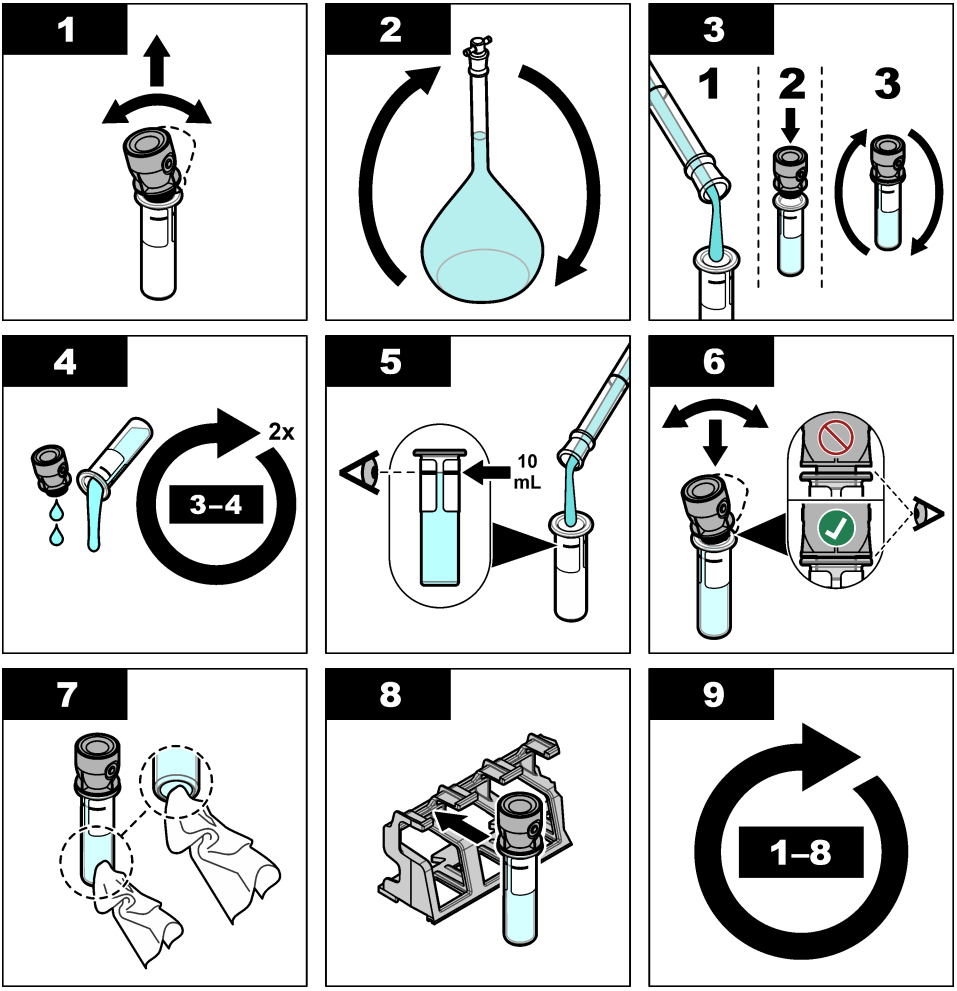

6.4.2.1 Make 4000-NTU Formazin stock solution

⚠ WARNING

Chemical exposure hazard. Obey laboratory safety procedures and wear all of the personal protective equipment appropriate to the chemicals that are handled. Refer to the current safety data sheets (MSDS/SDS) for safety protocols.

Note: *The manufacturer recommends that Formazin stock solution is not made from raw materials. Preparation of Formazin stock solution is temperature and technique sensitive. Use Hach Formazin stock solution to get the best instrument performance and analytical standard accuracy.*

1. Dissolve 5.000 grams of reagent grade hydrazine sulfate ($(NH_2)_2–H_2SO_4$) in about 400 mL of demineralized water.
2. Dissolve 50.000 grams of reagent grade hexamethylenetetramine in approximately 400 mL of demineralized water.
3. Quantitatively, pour the two solutions in a 1-liter volumetric flask, and dilute to volume with demineralized water. Mix fully.
4. Let the solution stand for 48 hours at 25 ± 1 °C (77 ± 1 °F).

6.4.2.2 Prepare Formazin standards

Prepare Formazin standards immediately before a calibration and discard after use.

1. Prepare a 20 NTU Formazin standard as follows:
   a. Use a pipet to add 5.0 mL of 4000 NTU Formazin standard solution in a 1-L volumetric flask.
   b. Dilute to the mark with deionized water or distilled water with a turbidity of less than 0.5 NTU. Put in the stopper and mix well.
2. When the sample turbidity range is 40 to 700 NTU[16], prepare a 600 NTU Formazin standard as follows:
   a. Use a pipet to add 15.0 mL of 4000 NTU Formazin standard solution in a 100-mL volumetric flask.
   b. Dilute to the mark with deionized water or distilled water with a turbidity of less than 0.5 NTU. Put in the stopper and mix well.

6.4.3 Calibration procedure—vials without RFID

1. Push **menu**. Select SENSOR SETUP> TU5x00 sc> CALIBRATION> SETUP> MENU GUIDED> SEALED VIAL.

2. Select SENSOR SETUP> TU5x00 sc> CALIBRATION> START.

The status indicator light changes to blue.

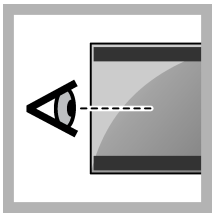

3. Follow the instructions on the controller display.

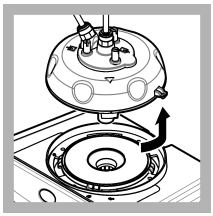

4. Remove the process head (or the automatic cleaning module).

[16] 1 mNTU = 0.001 NTU

5. Enter the value of the vial and push ENTER.

The status indicator light changes to blue.

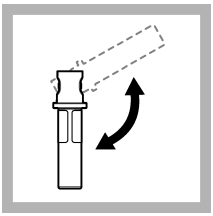

6. Carefully invert the vial a minimum of three times.

For StablCal vials, invert the 20 NTU StablCal vial for 2 to 3 minutes. Refer to the documentation supplied with the StablCal vials.

7. Clean and dry the vial with a no-lint cloth. Refer to Prevent vial contamination on page 34.

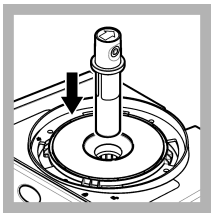

8. Put the vial in the vial compartment.

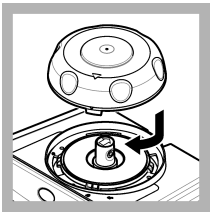

9. Install the calibration lid. Make sure that the calibration lid is in the closed position.

10. If the standard value that shows on the display is not correct, enter the accurate turbidity value of the standard from the certificate of analysis.

If the standard value that shows on the display is correct, push **enter**.

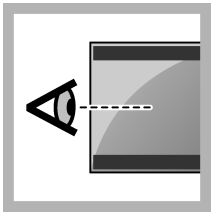

11. Complete the steps that show on the controller display.

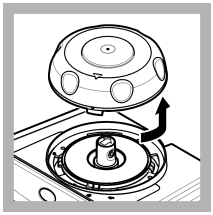

12. When the status indicator light changes to green, remove the calibration lid.

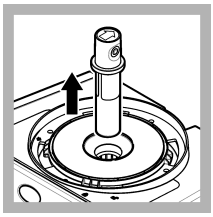

13. Remove the vial.

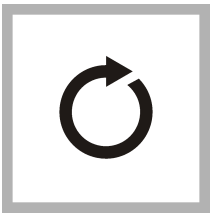

14. Do steps 4 to 12 again until all of the standard vials are measured.

15. If the value of the verification standard shows on the display, do steps 6 to 12 again to measure the verification standard.

16. Make sure that there is no water on the process head (or the automatic cleaning module). Dry all possible spills to prevent water ingress on the vial compartment.

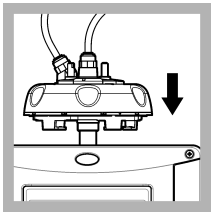

17. Install the process head (or the automatic cleaning module).

18. Push ENTER to save the calibration value. The status indicator light stays green.

Section 7 Verification

Use the optional calibration lid and a sealed-vial 10-NTU StablCal standard (or a StablCal 10 NTU standard and a syringe) to do a primary calibration verification. As an alternative, use the optional calibration lid and the optional glass verification rod (< 0.1 NTU) to do a secondary calibration verification in the lower range of turbidity.

Do a calibration verification immediately after each calibration to measure the verification standard and record the measured value to the instrument.

Do calibration verifications between calibrations according to the regulatory recommendations to identify if the instrument operates correctly and is calibrated.

When a calibration verification is done between calibrations, the verification standard is measured. The measured value is compared to the recorded value of the verification standard.

7.1 Configure the verification settings

Measure the value of the verification standard. Set the acceptance range and measurement units for verification. Set the verification reminder and type of menu guided verification. Set the output behavior during verification.

1. Push **menu**.
2. Select SENSOR SETUP>VERIFICATION>SETUP.
3. Select an option.

Option	Description
MENU GUIDED	Sets menu-guided verification to SEALED VIAL, SYRINGE or OFF (default). Verification instructions show on the controller display during verification when set to SEALED VIAL or SYRINGE. Select SEALED VIAL for verification with the glass verification rod.
DEFINE STD VAL	Measures the verification standard for later use during the verification. The instrument records the results to the data log. For the best results, measure the verification standard immediately after calibration.
ACCEPT. UNIT	Sets the acceptance range for verification to a percentage (1 to 99%) or an NTU value (0.015 to 100.00 NTU). Options: % or NTU (or mNTU).
ACCEPT. RANGE	Sets the maximum difference permitted between the recorded value of the verification standard and the measured value of the verification standard during verification. Options: 1 to 99% or 0.015 to 100.00 NTU.
VERIF REMINDER	Sets the time interval between calibration verifications. The display will show a reminder when a verification is due. Options: OFF(default), 1 day, 7 days, 30 days or 90 days. When a verification is done, the verification time is set to zero.
OUTPUT MODE	Sets the output behavior during verification. **ACTIVE**-The outputs continues to agree with the operating conditions. **HOLD** (default)-Keeps the outputs at the last known value when communication is lost. **SET TRANSFER**-Sets the outputs to the Set Transfer value selected in the controller settings.

7.2 Do a calibration verification with a syringe

Pre-requisite: Configure the verification settings. Refer to Configure the verification settings on page 39.

⚠ WARNING

Chemical exposure hazard. Obey laboratory safety procedures and wear all of the personal protective equipment appropriate to the chemicals that are handled. Refer to the current safety data sheets (MSDS/SDS) for safety protocols.

Items to collect:

- StablCal 10 NTU standard at the same ambient temperature as the sensor
- Calibration syringe and tubing

1. Push **menu**.
2. Select SENSOR SETUP>TU5x00 sc>VERIFICATION>SETUP>MENU GUIDED>SYRINGE.
3. Select SENSOR SETUP>TU5x00 sc>VERIFICATION>START.
4. Complete the steps shown on the display.
   Refer to the illustrated steps that follow to complete the steps shown on the display.

   At illustrated step 4, enter the measured turbidity value of the verification standard. If the verification standard value that shows on the display is correct, push confirm. The status indicator light changes to blue.

At illustrated step 15, fully open the flow regulator. Then slowly close the flow regulator until the flow decreases by 20 to 30%.

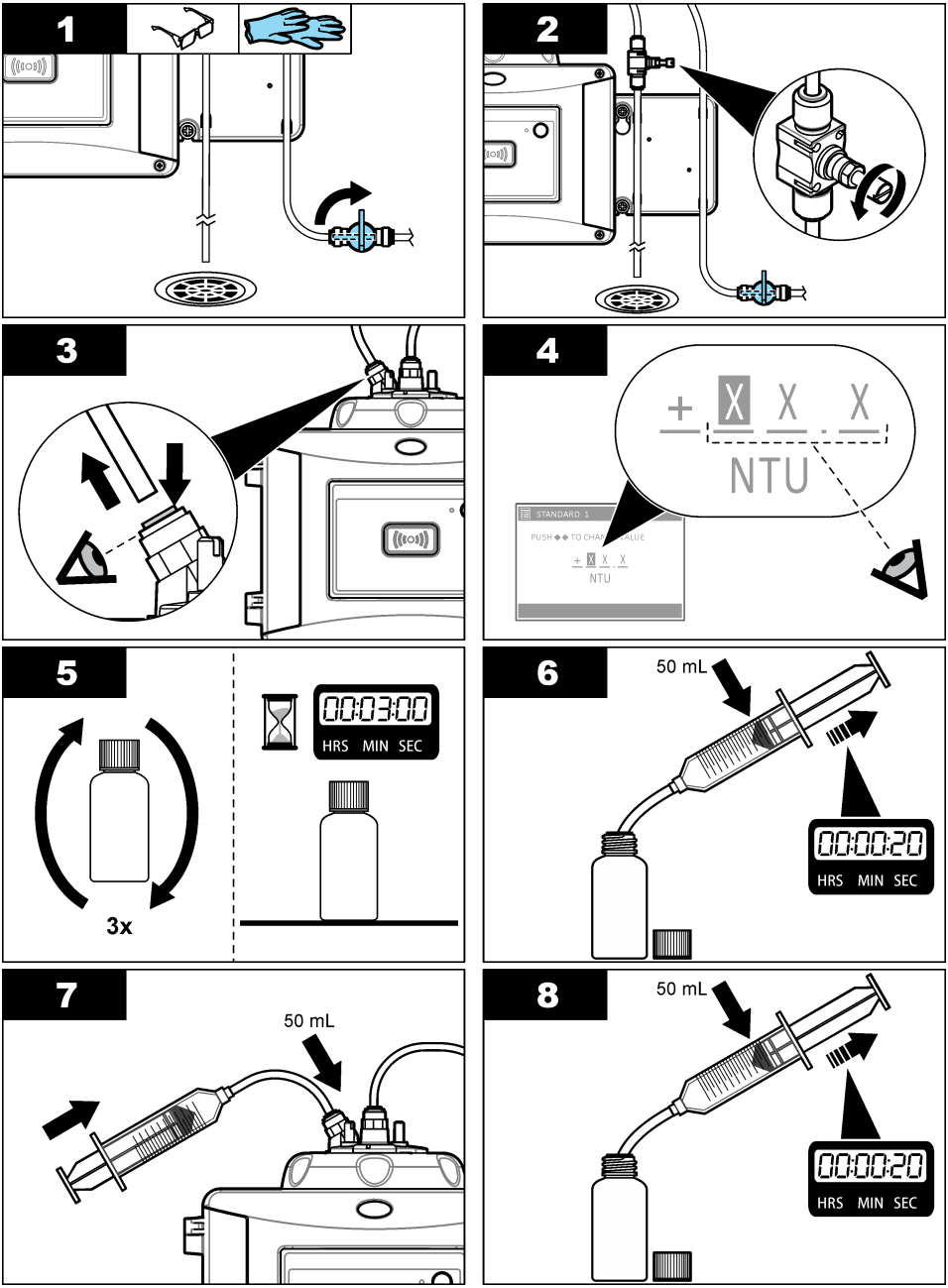

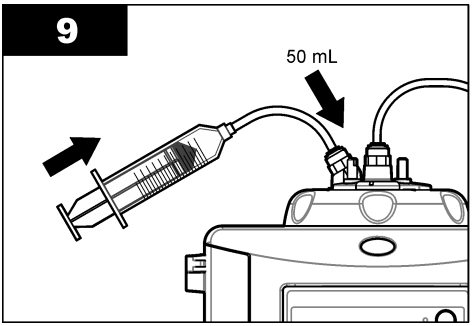
9
50 mL

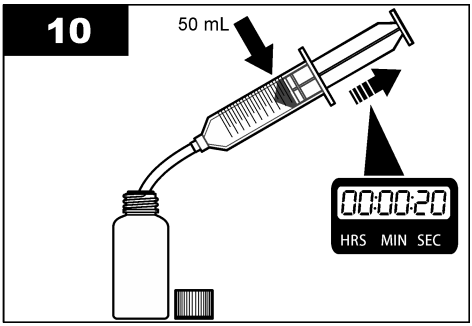
10
50 mL
00:00:20
HRS MIN SEC

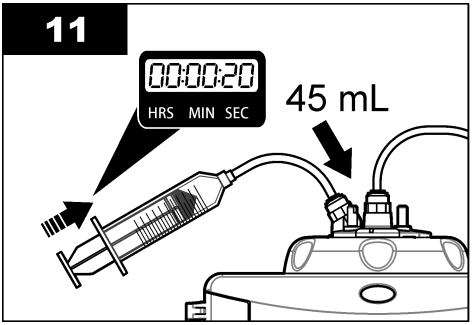
11
00:00:20
HRS MIN SEC
45 mL

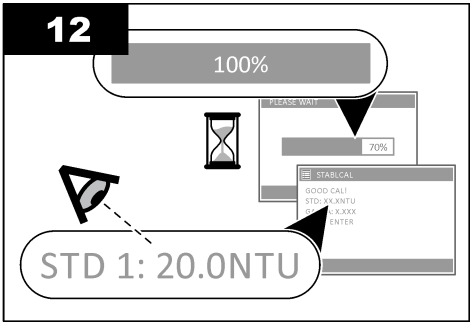
12
100%
70%
STABLCAL
GOOD CALI
STD: XX.XNTU
X.XXX
ENTER
STD 1: 20.0NTU

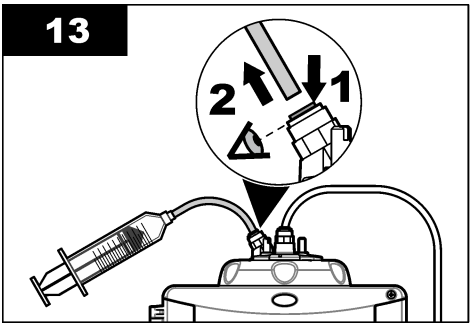
13
2
1

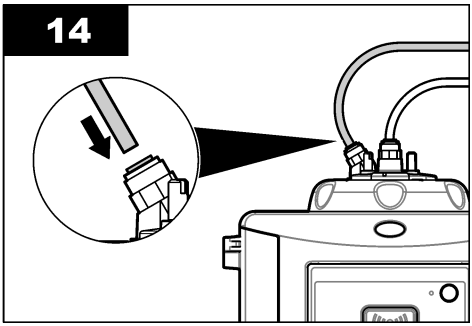
14

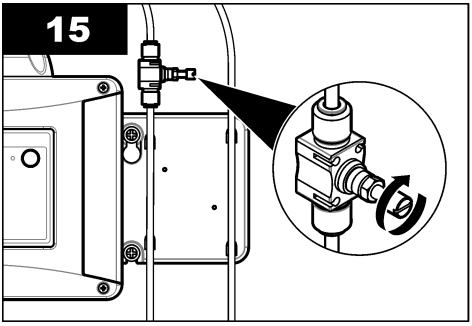
15

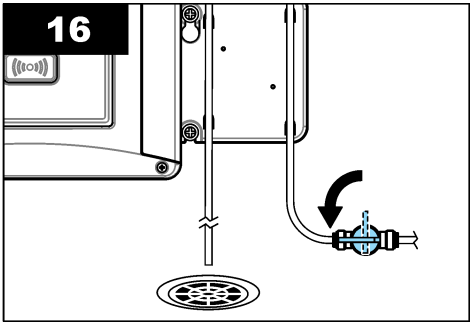
16

7.3 Do a calibration verification with a sealed vial or glass rod

Use the optional calibration lid and a sealed-vial 10-NTU StablCal standard to do a primary calibration verification. As an alternative, use the optional calibration lid and the optional glass verification rod (< 0.1 NTU) to do a secondary calibration verification.

1. Push **menu**. Select SENSOR SETUP> TU5x00 sc> VERIFICATION> SETUP>MENU GUIDED> SEALED VIAL.

2. Select SENSOR SETUP> TU5x00 sc> VERIFICATION> START.

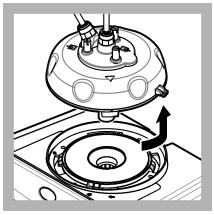

3. Remove the process head (or the automatic cleaning module). Press ENTER.

4. If the verification standard value that shows on the display is not correct, enter the accurate turbidity value of the verification standard from the certificate of analysis for the sealed-vial StablCal standard or from the last recorded value from the <0.1 NTU glass rod.

If the verification standard value that shows on the display is correct, push **confirm**.

The status indicator light flashes blue.

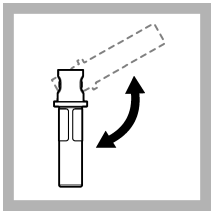

5. If the verification standard is a liquid standard, carefully invert the verification standard vial a minimum of three times.

6. Clean and dry the verification standard vial with a no-lint cloth. Refer to Prevent vial contamination on page 34.

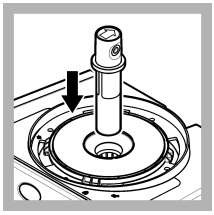

7. Put the vial in the vial compartment.

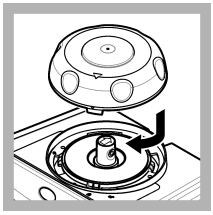

8. Install the calibration lid. Make sure that the calibration lid is in the closed position.

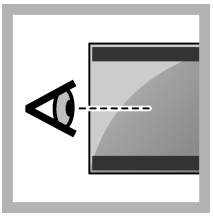

9. Complete the steps that show on the controller display.

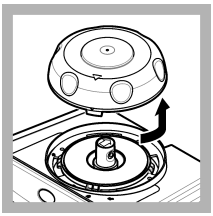

10. When the status indicator light flashes green, remove the calibration lid.

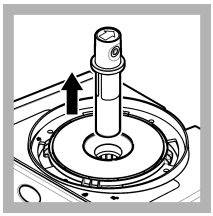

11. Remove the vial.

12. Make sure that there is no water on the process head (or the automatic cleaning module). Dry all possible spills to prevent water ingress on the vial compartment.

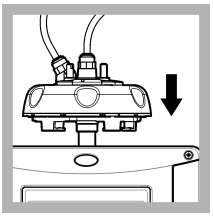

13. Install the process head (or the automatic cleaning module).

14. Push ENTER to save the calibration value. The status indicator light stays green.

7.4 Show the calibration or verification history

To show the historical data for the last four calibrations, push menu and select SENSOR SETUP>TU5x00 sc>CALIBRATION>CAL LOG.

To show the historical data for the last four verifications, push menu and select SENSOR SETUP>TU5x00 sc>VERIFICATION>VERIF LOG.

Section 8 Maintenance

⚠ WARNING	
	Burn hazard. Obey safe handling protocols during contact with hot liquids.

⚠ CAUTION	
	Multiple hazards. Only qualified personnel must conduct the tasks described in this section of the document.

⚠ CAUTION

Personal injury hazard. Never remove covers from the instrument. This is a laser-based instrument and the user risks injury if exposed to the laser.

⚠ CAUTION

Personal injury hazard. Glass components can break. Handle with care to prevent cuts.

NOTICE

Do not disassemble the instrument for maintenance. If the internal components must be cleaned or repaired, contact the manufacturer.

NOTICE

Stop the sample flow to the instrument and let the instrument become cool before maintenance is done.

To set the output behavior during maintenance, push **menu** and select SENSOR SETUP>TU5x00 sc>DIAG/TEST>MAINTENANCE>OUTPUT MODE.

8.1 Maintenance schedule

Table 3 shows the recommended schedule of maintenance tasks. Facility requirements and operating conditions may increase the frequency of some tasks.

Table 3 Maintenance schedule

Task	1 to 3 months	1 to 2 years	As necessary
Clean the vial on page 46 ***Note:*** *The cleaning interval is dependent on the water quality.*	X		
Clean the vial compartment on page 48			X
Replace the vial on page 49		X	
Replace the desiccant cartridge on page 51 ***Note:*** *The replacement interval is dependent on the ambient humidity, ambient temperature and sample temperature.*		X[17]	
Replace the tubing on page 51			X

8.2 Clean spills

⚠ CAUTION

Chemical exposure hazard. Dispose of chemicals and wastes in accordance with local, regional and national regulations.

1. Obey all facility safety protocols for spill control.
2. Discard the waste according to applicable regulations.

[17] Two years or as identified by instrument notification.

8.3 Clean the instrument

Clean the exterior of the instrument with a moist cloth and a mild soap solution and then wipe the instrument dry as necessary.

8.4 Clean the vial

⚠ WARNING

Chemical exposure hazard. Obey laboratory safety procedures and wear all of the personal protective equipment appropriate to the chemicals that are handled. Refer to the current safety data sheets (MSDS/SDS) for safety protocols.

When the turbidity reading shows that there is contamination in the process vial or "VIAL CLARITY" shows on the controller display, clean the vial.

1. Push **menu**.
2. Select SENSOR SETUP>TU5x00 sc>DIAG/TEST>MAINTENANCE>VIAL CLEANING.
3. Complete the steps that show on the controller display. The instrument automatically saves the cleaning process date after the last screen shows.
4. If the optional automatic cleaning module is installed, push **menu** and select SETUP>TU5x00 sc>START WIPE to start the automatic cleaning process.
5. If the optional automatic cleaning module is not installed, clean the vial with the manual vial wiper.

NOTICE

Carefully remove most of the water in the vial. Carefully put the vial wiper into the process vial so that no water spills out.

Clean the process vial with the manual vial wiper as shown in the illustrated steps that follow.

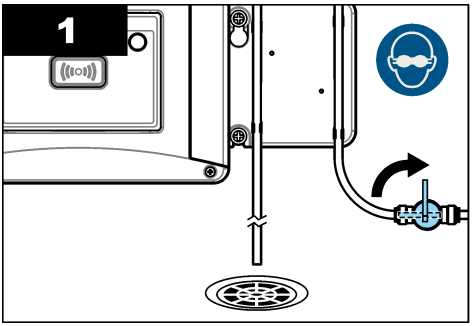

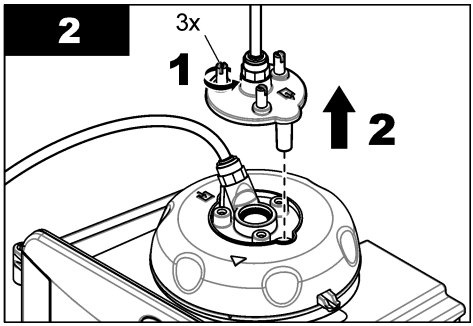

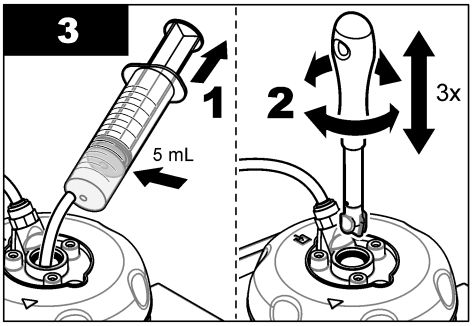

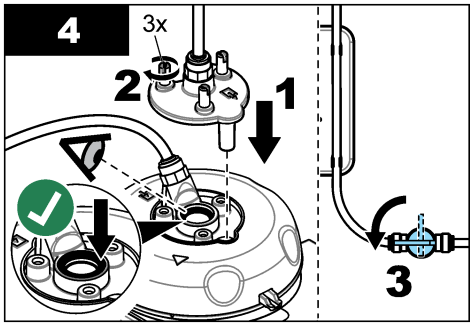

8.4.1 Do a chemical vial cleaning

If the turbidity readings do not go back to the original values, do the illustrated steps that follow to clean the vial.

Note: *Hold the output values of the SC controller as necessary before the illustrated steps are done. Refer to the SC controller documentation to hold the outputs.*

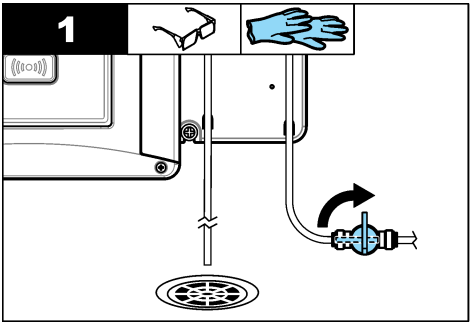

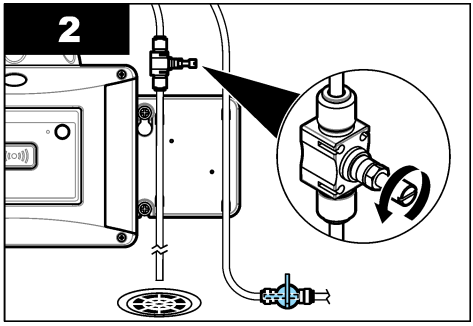

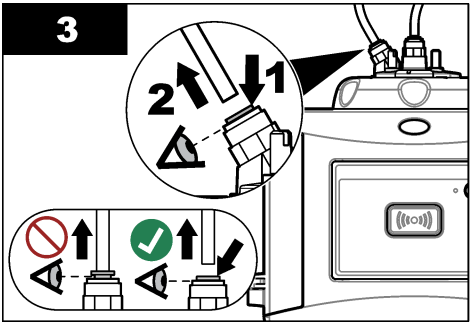

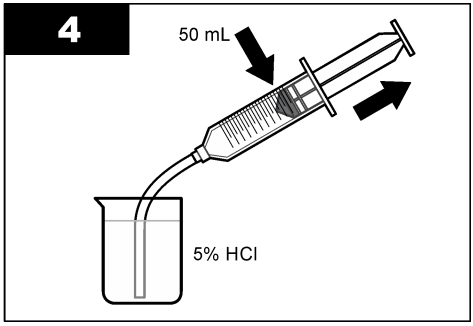

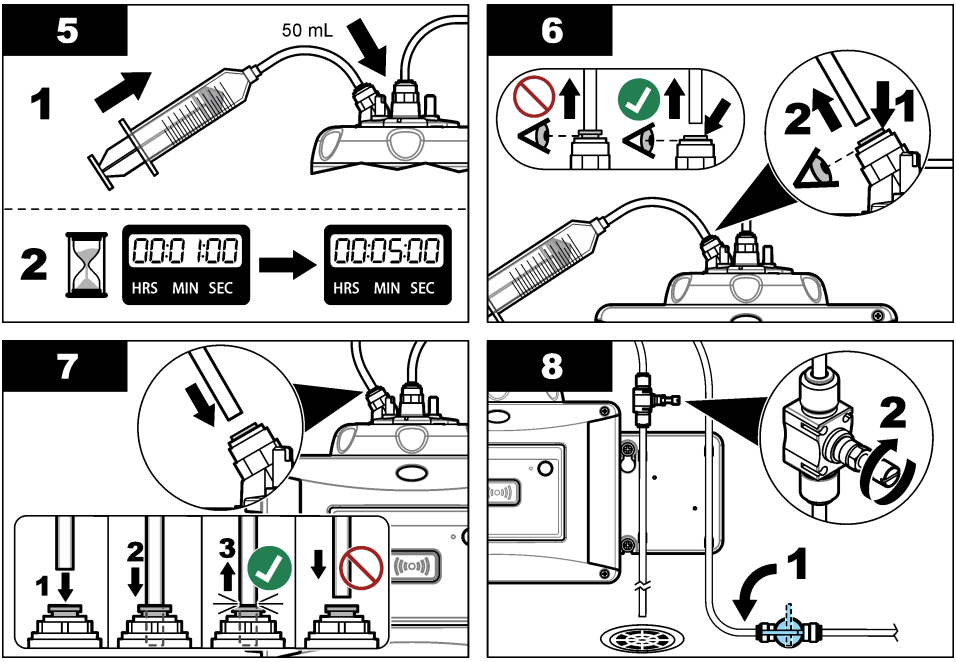

8.5 Clean the vial compartment

Clean the vial compartment only when the compartment has contamination. Make sure that the tool to clean the vial compartment has a soft surface and does not damage the instrument. Table 4 and Figure 8 show the options on how to clean the vial compartment.

Table 4 Cleaning options

Contaminant	Options
Dust	Vial compartment wiper, micro fiber cloth, lint-free cloth
Liquid, oil	Cloth, water and cleaning agent

Figure 8 Cleaning options

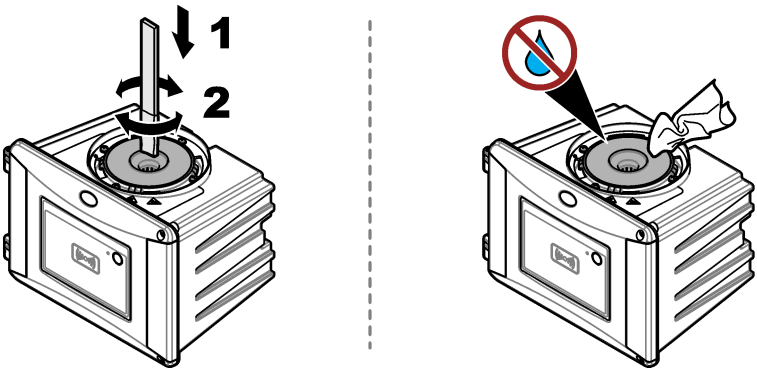

8.6 Replace the vial

NOTICE

Keep water out of the vial compartment or instrument damage will occur. Before the automatic cleaning module is installed on the instrument, make sure that there are no water leaks. Make sure that all tubing is fully seated. Make sure that the green O-ring is in place to seal the vial. Make sure that the vial nut is tight.

NOTICE

Hold the automatic cleaning module vertically when it is installed on the instrument or the vial can break. If the vial breaks, water will get in the vial compartment and instrument damage will occur.

NOTICE

Do not to touch or scratch the glass of the process vial. Contamination or scratches on the glass can cause measurement errors.

NOTICE

Based on the environmental conditions, is necessary to wait a minimum of 15 minutes to let the system become stable.

Note: *Make sure that no particles fall into the vial compartment.*

1. Push **menu**.
2. Select SENSOR SETUP>[select analyzer]>DIAG/TEST>MAINTENANCE>VIAL REPLACEMENT.
3. Complete the steps that show on the controller display. The date the vial was replaced is automatically saved after the last screen shows.

   Refer to the illustrated steps that follow to replace the vial. To protect the new vial from contamination, use the vial replacement tool to install the vial.

   At illustrated step 3, put the process head on its side on a flat surface if a service bracket is not installed near the instrument.

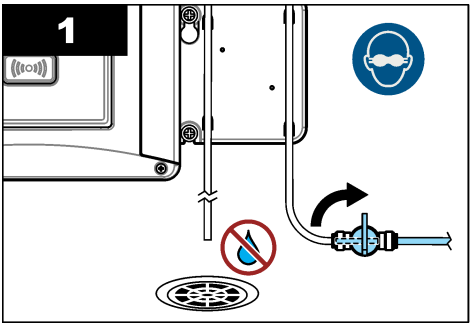

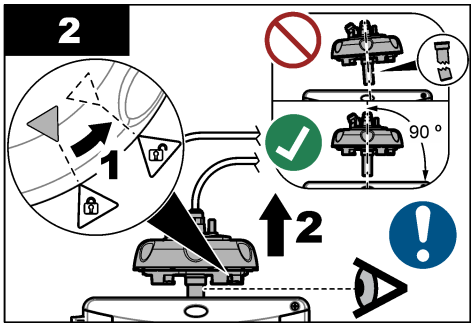

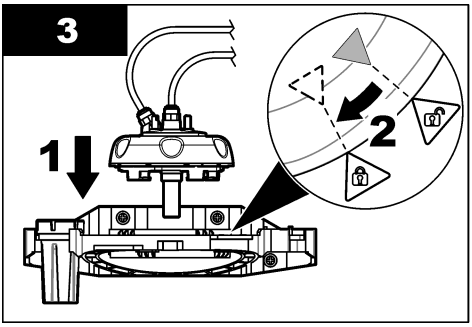
3
1
2

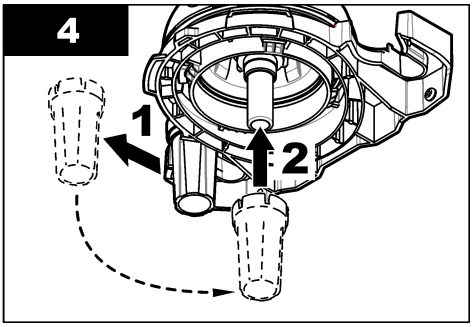
4
1
2

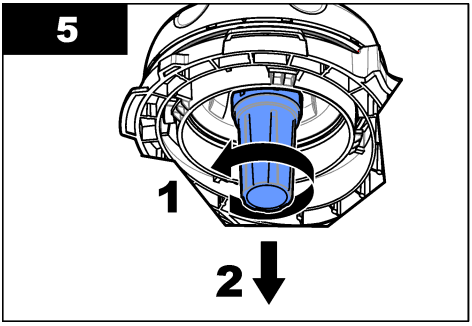
5
1
2

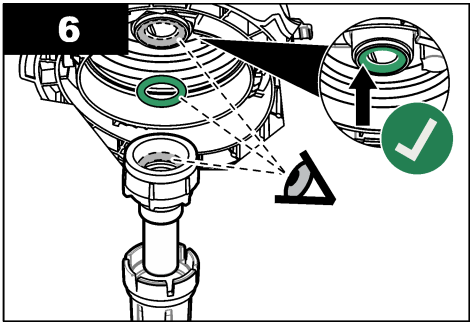
6

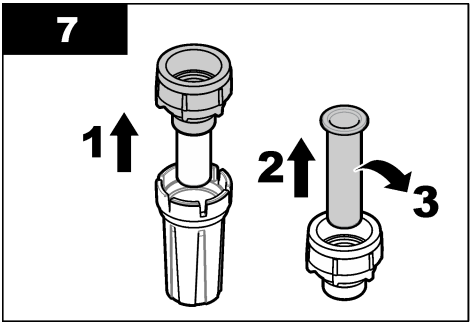
7
1
2
3

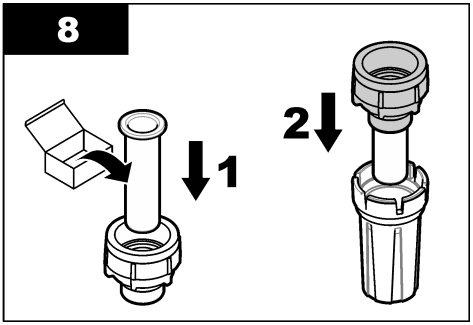
8
1
2

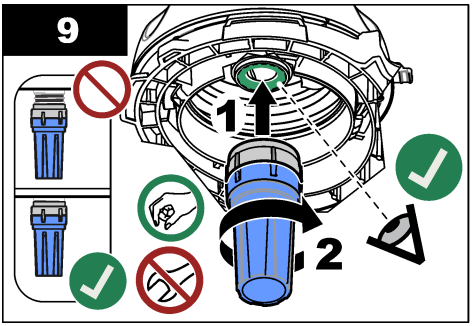
9
1
2

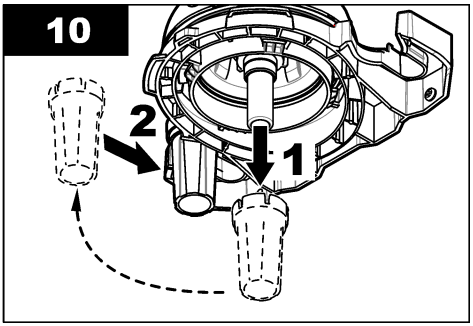
10
2
1

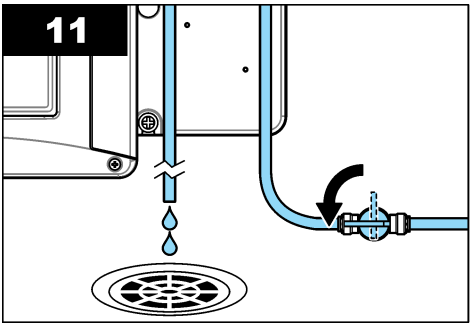

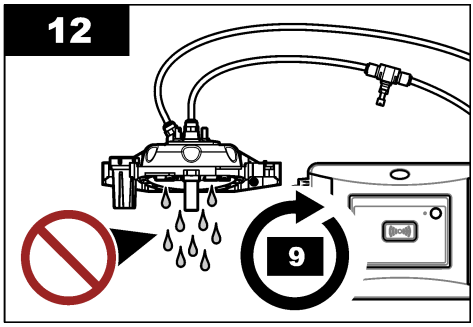

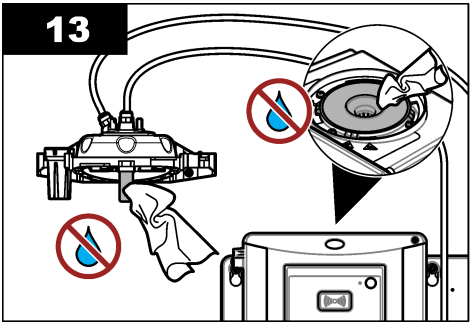

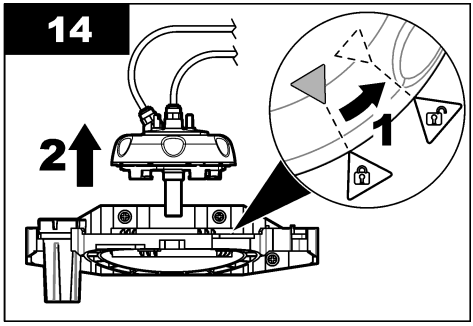

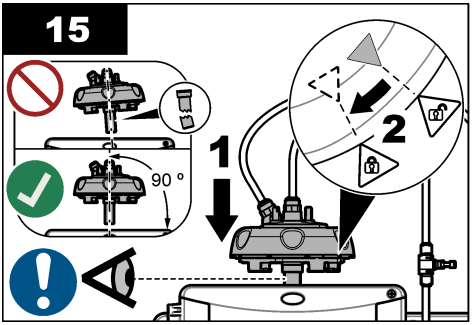

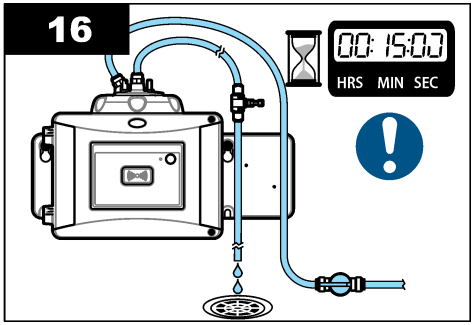

8.7 Replace the desiccant cartridge

The controller display will show when a desiccant cartridge replacement is due. Refer to the documentation included in the desiccant cartridge bag to replace the desiccant cartridge.

8.8 Replace the tubing

Replace the tubing when the tubing has a blockage or has damage.

Turn the flow shutoff valve to stop flow to the instrument. Then refer to Plumb the instrument on page 19 to replace the tubing.

Section 9 Troubleshooting

More troubleshooting information is available online. Go to www.hach.com, then click Support to go to Hach Support Online.

9.1 Reminders

Reminders show on the controller display. To see all of the reminders, push **menu** then select DIAGNOSTICS>TU5x00 sc>REMINDER.

Message	Description	Solution
DRYER RANGE	The desiccant cartridge capacity is low.	Replace the desiccant cartridge. Refer to the documentation supplied with the desiccant cartridge.
PERFORM CAL	A calibration is due.	Do a calibration. Refer to Calibration on page 27.
PERFORM VER	A verification is due.	Do a verification. Refer to Verification on page 39.
WIPER REPLACE	A wiper replacement is due in the automatic cleaning module.	Replace the wiper in the automatic cleaning module. Refer to the documentation supplied with the automatic cleaning module to replace the wiper.

9.2 Warnings

Warnings show on the controller display. To see all of the active warnings, push **menu** then select DIAGNOSTICS>TU5x00 sc>WARNING LIST.

Warning	Description	Solution
CLEANING MODULE	The automatic cleaning module does not operate correctly.	Make sure that the wiper head is installed correctly and the wiper arm can move up and down.
DESICCANT OLD	The desiccant cartridge is more than 2 years old.	Replace the desiccant cartridge. Refer to the documentation supplied with the desiccant cartridge.
DRYER EXHAUS'D	The desiccant cartridge life is zero.	Replace the desiccant cartridge. Refer to the documentation supplied with the desiccant cartridge.
HIGH FLOW	The flow rate is higher than the limit (more than 1250 mL/min).	Adjust the flow regulator as necessary. Make sure that the flow regulator does not have a malfunction.
HUM PCB SC	There is humidity on the interior electronics of the instrument.	Contact technical support. Measurements with limited validity are still available.
LASER-TEMP HIGH	The laser temperature is higher than the limit.	Decrease the environmental temperature of the instrument.
LASER-TEMP SENS	The laser temperature sensor has a malfunction.	Contact technical support. Measurements with limited validity are still available.

Warning	Description	Solution
LOW FLOW	The flow rate is lower than the limit (less than 75 mL/min).	Examine the tubing for blockages that decrease the flow rate. Remove the blockages. Adjust the flow regulator as necessary. Make sure that the flow regulator does not have a malfunction.
NO FLOW	The flow rate is less than 10 mL/min.	Examine the tubing for blockages stop the flow. Remove the blockages.
NOT DRYING	The instrument cannot regulate the internal humidity.	Replace the desiccant cartridge. Refer to Replace the desiccant cartridge on page 51. If the error continues, contact technical support. Measurements with limited validity are still available.
PUMP	The air pump for the drying circuit has a malfunction.	Contact technical support. Measurements with limited validity are still available.
SENS.DRY: FUNC	The air system of the drying system has a malfunction.	Contact technical support. Measurements are still available, but the life of the desiccant cartridge is decreases.
TURB TOO HIGH	The turbidity reading is not within the calibration range.	Make sure that the calibration range selected is applicable to the turbidity value of the sample.
WIPER REPLACE	A wiper replacement is due in the automatic cleaning module.	Replace the wiper in the automatic cleaning module. Refer to the documentation supplied with the automatic cleaning module to replace the wiper.
VIAL CLARITY	The vial or vial compartment is dirty.	Clean or dry the vial and the vial compartment.

9.3 Errors

Errors show on the controller display. To see all of the active errors, push **menu** then select DIAGNOSTICS>TU5x00 sc>ERROR LIST.

Error	Description	Solution
AUTOCHK. NO FUNC	The automatic system check does not complete.	Contact technical support.
CLEANING MODULE	The automatic cleaning module has a malfunction.	Contact technical support.
EE RSRVD ERR	There is a problem with the internal memory.	Contact technical support.
FLASH FAIL	The internal calibration memory is corrupted.	Contact technical support.
HUMIDITY PCB	There is humidity or water in the instrument.	Contact technical support.
LASER TOO LOW	The laser has a malfunction.	Contact technical support.
MEAS ELECTRONIC	There is a measurement error. There is a problem in the electronics unit.	Contact technical support.

Error	Description	Solution
PROC HEAD OPEN	The process head is in the open position or the process head detector has a malfunction.	Turn the process head to the closed position.
TURB TOO HIGH	The turbidity reading is higher than the measurement range of the instrument (700 FNU maximum).	Make sure that the turbidity value of the sample is within the measurement range of the instrument.
VIAL PRESENT	There is no vial in the vial compartment.	Install a vial in the vial compartment.
VIAL CLARITY	The vial or vial compartment is dirty.	Clean or dry the vial and the vial compartment.
WATER INGRESS[18]	There is water in the instrument.	Immediately stop flow to the instrument. Disconnect the sensor cable. The desiccant cartridge can become hot. Only touch and remove the desiccant cartridge when it is at room temperature.

9.4 Fix water ingress

The device has a drying system to prevent condensation on the vial. If water goes into the drying system the device shows the error message "Water Ingress". The desiccant cartridge starts an irreversible water stop procedure to make sure that no water goes into the measuring unit. Make sure to use always a new desiccant cartridge, eventhough the desiccant cartridge has a blue indicator, to fix the water ingress.

Items to collect:

- LZY945—Microfiber cloth, vial cleaning
- LZY906—Vial replacement tool
- LZY876—Desiccant cartridge
- optional LZY918—Seal, process vial
- optional LZY917—Nut, process vial
- optional LZY834—Vial, process
- optional LZY910—Vial compartment wiper

Causes of water ingress

Note: *Make sure to do a visual inspection and a leak test before the device is put back into operation.*

1. The vial is broken or there is a crack on the vial.

   a. Replace the vial.
   b. Clean the contact surface of the vial on the O-ring and the vial nut.
   c. Clean the contact surface of the O-ring on the vial.
   d. Make sure that the edge of the vial and the seal are clean and with no dust.
   e. Tighten the vial nut by hand.

[18] Water drops, puddles or runlets that will not damage the instrument may be in the inner of the enclosure.

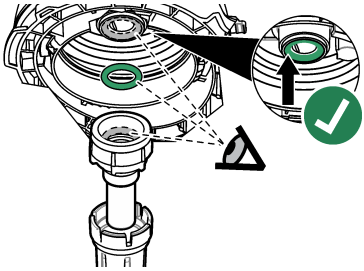

2. The green O-ring between vial and process head is missing or the position is not correct.

   a. Make sure that the O-ring of the process head or cleaning unit is in the correct position. Use the tool LZY906 to install the vial.
   b. Clean the contact surface of the vial on the O-ring and the vial nut.
   c. Clean the contact surface of the O-ring on the vial.
   d. Make sure that the edge of the vial and the seal are clean and with no dust.
   e. Tighten the vial nut by hand.

3. Water in or on the top of the vial compartment.

   a. Clean the vial compartment and the top of the vial compartment with a clean and dust-free cleaning cloth.
   b. Make sure that there is no water on the process head (or automatic cleaning module).
   c. Dry all possible spills to prevent water ingress on the vial compartment.
4. There is a strong condensation on the inner side of the process head or on the vial compartment.

   a. Dry the water with a clean and dust-free cleaning cloth.

9.4.1 Setup after water ingress error

NOTICE

Keep water out of the vial compartment or instrument damage will occur. Before the process head (or automatic cleaning module) is installed on the instrument, make sure that there are no water leaks. Make sure that all tubing is fully seated. Make sure that the vial nut is tight.

NOTICE

Hold the process head (or automatic cleaning module) vertically when it is removed from the instrument or condensation water can fall into the instrument. If condensation water gets into the vial compartment instrument damage will occur.

NOTICE

Make sure to lift the process head (or automatic cleaning module) the sufficient distance to release the vial (approximately 10 cm (3.94 in.) or the vial can break. If the vial breaks, water will get in the vial compartment and instrument damage will occur.

NOTICE

Do not to touch or scratch the glass of the process vial. Contamination or scratches on the glass can cause measurement errors.

NOTICE

Although the indicator on the desiccant cartridge is blue, the cartridge is wasted after a water ingress. The water stop procedure in the desiccant cartridge can not be reset. It is necessary to use a new cartridge during the procedure FIX WATER INGRESS.

NOTICE

After completing the procedure FIX WATER INGRESS, the pump will operate for a maximum of 6 hours. Subsequently, more frequent and longer pump cycles can occur.

1. Push **Menu**.
2. Select SENSOR SETUP>TU5x00 sc>DIAG/TEST>MAINTENANCE>FIX WATER INGRESS.
3. Follow the steps that show on the controller.
4. Install a new desiccant cartridge during the water ingress procedure.
   Make sure that the new desiccant cartridge is **not** connected to the pump.

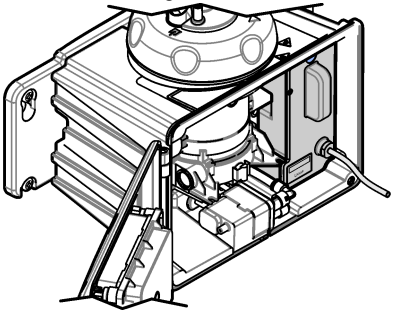

5. The pump starts for 25 minutes to dry the pump and tubes.
6. After the drying time, dry water drips at the outlet of the pump with a dust-free cleaning cloth.
7. Connect the desiccant cartridge to the pump.

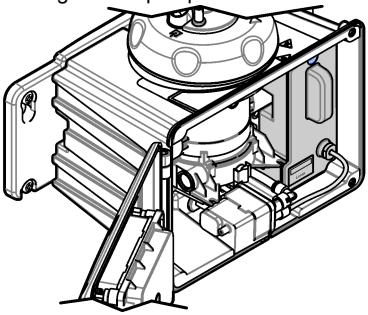

Section 10 Replacement parts and accessories

⚠ WARNING

Personal injury hazard. Use of non-approved parts may cause personal injury, damage to the instrument or equipment malfunction. The replacement parts in this section are approved by the manufacturer.

Note: *Product and Article numbers may vary for some selling regions. Contact the appropriate distributor or refer to the company website for contact information.*

Recommended standards

Description	Quantity	Item no.
Verification standard, < 0.1 NTU, glass verification rod (solid secondary standard)	each	LZY901
StablCal 800 mNTU Standard	1 L	2788453
StablCal 10 NTU Standard	500 mL	2659949
StablCal 20 NTU Standard	1 L	2660153
StablCal 20-NTU sealed vial with RFID	each	LZY837
StablCal 20-NTU sealed vial without RFID	each	LZY899
StablCal kit, sealed vials with RFID, includes: 10, 20 and 600 NTU vials	each	LZY835
StablCal kit, sealed vials without RFID, includes: 10, 20 and 600 NTU vials	each	LZY898

Replacement parts

Description	Quantity	Item no.
Cleaning lid screws and washers, hot water, includes: Cleaning lid screws (3x) and washers (3x)	3	LZY905
Desiccant cartridge	each	LZY876
Mounting set, includes: Mounting screws (4x), tubing clip screws (2x) and tubing clips (2x)	each	LZY870
Nut, process vial	each	LZY917
Seal, automatic cleaning module	each	LZY914
Seal, process head	each	LZV969
Seal, process vial	each	LZY918
Service bracket	each	LZY873
Flow regulator kit, includes: flow regulator and tube ¼-in. OD × 0.13 m (5.11 in.)	each	LZY963
Vial with seal, process	each	LZY834
Vial replacement tool	each	LZY906
Wall mount bracket kit, includes: Wall mount bracket (two tubing clips on bracket), mounting screws (4x), tubing clips (2x) and tubing clip screws (2x)	each	LZY871

Accessories

Description	Quantity	Item no.
Automatic cleaning module	each	LQV159.99.00002
Bubble trap	each	LZY828.99.00002

Accessories (continued)

Description	Quantity	Item no.
Calibration lid	each	LZY904.98.00002
Extension cable, sensor cable, 1 m (3.3 ft)	each	6122400
Extension cable, sensor cable, 5 m (16.40 ft)	each	LZX848
Extension cable, sensor cable, 10 m (32.81 ft)	each	LZX849
Flow sensor kit, includes: flow sensor, flow sensor cap, mounting screws and 1 m (3.3 ft) of ¼ in. OD tubing	each	LQV160.99.00002
Maintenance kit for post-filter applications, includes: Case, calibration lid, micro fiber cloth, 20 NTU StablCal sealed vial, verification glass rod, vial wiper, vial compartment wiper, mobile service bracket, glass verification rod (≤ 0.1 NTU) and vial replacement tool	each	LZY907
Micro fiber cloth, vial cleaning	each	LZY945
Process head holder	each	LZY946
RFID tags, operator	2/pkg	LZQ066
RFID stickers, black[19]	3/pkg	LZQ067
Syringe with tubing, calibration and verification	each	LZY953
Tubing adapter, ¼ in. to 6 mm	each	LZY954
Tubing, bubble trap to TU5x00 sc, ¼ in. OD	1 m	LZQ134
Tubing set, ULTRATURB replacement	each	LZY912
Tubing, inlet of bubble trap, 3/8 in. OD	4 m	LZY947
Tubing, inlet and outlet of TU5x00 sc, ¼ in. OD	4 m	LZY911
Vial wiper	each	LZY903
Vial compartment wiper	each	LZY910

[19] Other colors are available.

HACH COMPANY World Headquarters
P.O. Box 389, Loveland, CO 80539-0389 U.S.A.
Tel. (970) 669-3050
(800) 227-4224 (U.S.A. only)
Fax (970) 669-2932
orders@hach.com
www.hach.com

HACH LANGE GMBH
Willstätterstraße 11
D-40549 Düsseldorf, Germany
Tel. +49 (0) 2 11 52 88-320
Fax +49 (0) 2 11 52 88-210
info-de@hach.com
www.de.hach.com

HACH LANGE Sàrl
6, route de Compois
1222 Vésenaz
SWITZERLAND
Tel. +41 22 594 6400
Fax +41 22 594 6499

© Hach Company/Hach Lange GmbH, 2015–2017, 2019, 2021.
All rights reserved.