Barnstead International

Cimarec™ Stirrers

OPERATION MANUAL AND PARTS LIST

Model #	Top Plate Size	Voltage
S130814	4x4	100
S130815	4x4	120
S130810-33	4x4	220-240
S131124	7x7	100
S131125	7x7	120
S131120-33	7x7	220-240
S131434	10x10	100
S131435	10x10	120
S131430-33	10x10	220-240

LT1311X1 • 10/31/06

Table of Contents

Safety Information 3
Warnings 3
Specifications 5
Stirring Speed Specifications 6
Environmental Conditions 7
Declaration of Conformity 7
Introduction 8
General Usage 8
Principles of Operation 9
Unpacking and Installation 10
Unpacking 10
Installation 10
Operation 11
Setting the Stirring Speed 11
Maintenance 12
General Cleaning Instructions 12
Troubleshooting 13
Error Codes 13
Exploded Views 14
Wiring Diagram 20
Replacement Parts 21
Ordering Procedures 22
Warranty 24

Safety Information

Alert Signals

Warning
Warnings alert you to a possibility of personal injury.

Caution
Cautions alert you to a possibility of damage to the equipment.

Note
Notes alert you to pertinent facts and conditions.

Your Barnstead|Thermolyne Cimarec Stirrer has been designed with function, reliability, and safety in mind. It is your responsibility to install it in conformance with local electrical codes. For safe operation, please pay attention to the alert signals throughout the manual.

This manual contains important operating and safety information. The user must carefully read and understand the contents of this manual prior to the use of this equipment.

Warnings

To avoid electrical shock, always:

1. Use a properly grounded electrical outlet of correct voltage and current handling capacity.

2. Disconnect from the power supply prior to maintenance and servicing.

To avoid personal injury:

1. Do not use in the presence of flame or combustible materials — fire or explosion may result. This device contains components which may ignite such materials. Not rated for use in hazardous atmospheres.

2. Keep top surface clean. Use a non-abrasive cleaner. Alkali spills, hydrofluoric acid spills or phosphoric acid spills may damage top and lead to thermal failure. Unplug unit and remove spills promptly. Do not immerse unit for cleaning.

3. Replace the top immediately if damaged by etching, scratching or chipping. A damaged top can break in use.

4. Check and tighten the removable cord periodically making sure it is secure. If loosened, the cord could become hot and/or spark and be a potential fire hazard. If cord appears damaged, replace immediately. If cord is repeatedly loosened it is recommended to purchase the cord retaining clip (part number AY1313X1 or AY1313X2) listed in the Replacement Parts section of this manual.

5. Do not remove or modify grounded power plug. Use only properly grounded outlets to avoid shock hazard.

6. Use appropriate hand and eye protection when handling hazardous chemicals.

7. Gross weight of items placed on top of stirrer should not exceed 35 lbs. (15.9 kg.) on the 10” x 10” models, 25 lbs. (11.3 kg) on the 7” x 7” models, and 15 lbs. (6.8 kg.) on the 4” x 4” models.

8. Refer servicing to qualified personnel.

Specifications

4" X 4"

Model Number	S130815	S130810-33	S130814
		Overall Dimensions in. (cm)	
Width	5.0” (12.7 cm)	5.0” (12.7 cm)	5.0” (12.7 cm)
Height	3.6" (9.7 cm)	3.6" (9.7 cm)	3.6" (9.7 cm)
Depth	10.0" (25.4 cm)	10.0" (25.4 cm)	10.0" (25.4 cm)
Weight lbs. (kg)	7.0 lbs (3.2 kg)	7.0 lbs (3.2 kg)	7.0 lbs (3.2 kg)
		Top Plate	
Width	4.25" (10.8 cm)	4.25" (10.8 cm)	4.25" (10.8 cm)
Height	1.0" (2.5 cm)	1.0" (2.5 cm)	1.0" (2.5 cm)
Depth	4.25" (10.8 cm)	4.25" (10.8 cm)	4.25" (10.8 cm)
		Electrical Ratings	
Volts	120	220-240	100
Amps	0.37	0.17	0.47
Watts	20	20	25
Freq.	60	50/60	50/60
Phase	1	1	1

7" X 7"

Model Number	S131125	S131120-33	S131124
		Overall Dimensions in. (cm)	
Width	8.2” (20.8 cm)	8.2” (20.8 cm)	8.2” (20.8 cm)
Height	3.8” (9.7 cm)	3.8” (9.7 cm)	3.8” (9.7 cm)
Depth	13.0” (33.0 cm)	13.0” (33.0 cm)	13.0” (33.0 cm)
Weight lbs. (kg)	11.0 lbs (5.0 kg)	11.0 lbs (5.0 kg)	11.0 lbs (5.0 kg)
		Top Plate	
Width	7.25” (18.4 cm)	7.25” (18.4 cm)	7.25” (18.4 cm)
Height	1" (2.5 cm)	1" (2.5 cm)	1" (2.5 cm)
Depth	7.25” (18.4 cm)	7.25” (18.4 cm)	7.25” (18.4 cm)
		Electrical Ratings	
Volts	120	220-240	100
Amps	0.37	0.17	0.47
Watts	20	20	25
Freq.	60	50/60	50/60
Phase	1	1	1

10" X 10"

Model Number	S131435	S131430-33	S131134
		Overall Dimensions in. (cm)	
Width	11.38” (28.9 cm)	11.38” (28.9 cm)	11.38” (28.9 cm)
Height	4.0” (10.2 cm)	4.0” (10.2 cm)	4.0” (10.2 cm)
Depth	16.25” (41.3 cm)	16.25” (41.3 cm)	16.25” (41.3 cm)
Weight lbs (kg)	13.75 lbs. (6.24 kg)	13.75 lbs. (6.24 kg)	13.75 lbs. (6.24 kg)
		Top Plate	
Width	10.5” (26.7 cm)	10.5” (26.7 cm)	10.5” (26.7 cm)
Height	1.0" (2.5 cm)	1.0" (2.5 cm)	1.0" (2.5 cm)
Depth	10.5” (26.7 cm)	10.5” (26.7 cm)	10.5” (26.7 cm)
		Electrical Ratings	
Volts	120	220-240	100
Amps	0.37	0.17	0.47
Watts	20	20	25
Freq.	60	50/60	50/60
Phase	1	1	1

Stirring Speed Specifications

Speed Range 60 to 1200 RPM
(Maximum speed is dependent on the viscosity of the solution)

Speed Dial Position	Estimated Stirring Speed
2	60 rpm
4	125 rpm
6	350 rpm
8	700 rpm
10	1100 rpm
12	1200 rpm

Stability of the stirring speed setpoint (600 ml of water in a 1000 ml glass flask) ± 5.0%

Top Plate Size	Max Recommended Flask Size	Max Weight on Top Plate
4" x 4"	1 liter	15 lbs
7" x 7"	4 liters	25 lbs
10" x 10"	6 liters	35 lbs

Environmental Conditions

Operating: 17°C to 27°C; 20% to 80% relative humidity, non-condensing.
Installation category II (overvoltage) in accordance with IEC 664.
Pollution degree 2 in accordance with IEC 664.
Altitude Limit: 2,000 meters.

Storage: -25°C to 65°C
10% to 85% relative humidity

Declaration of Conformity

(for 220-240 volt, -33 CE models only)

Barnstead International hereby declares under its sole responsibility that this product conforms with the technical requirements of the following standards:

EMC:	EN 61000-3-2	Limits for harmonic current emissions
	EN 61000-3-3	Limits for voltage fluctuations and flicker
	EN 61326-1	Electrical equipment for measurement, control, and laboratory use; Part I: General Requirements
Safety:	EN 61010-1	Safety requirements for electrical equipment for measurement, control, and laboratory use; Part I: General Requirements
	EN 61010-2-051	Part II: Particular requirements for laboratory equipment for mixing and stirring

per the provisions of the Electromagnetic Compatibility Directive 89/336/EEC, as amended by 92/31/EEC and 93/68/EEC, and per the provisions of the Low Voltage Directive 73/23/EEC, as amended by 93/68/EEC.

The authorized representative located within the European Community is:

Electrothermal Engineering Ltd.
419 Sutton Road
Southend On Sea
Essex SS2 5PH
United Kingdom

Copies of the Declaration of Conformity are available upon request.

Introduction

Please read all the information in this manual before operating the unit.

Your Barnstead|Thermolyne Cimarec stirrer is a general purpose stirring plate designed for laboratory procedures requiring precise control of stirring speed. The stirrer will accurately maintain stirring speeds from 60 rpm up to 1200 rpm. The top plate on the Cimarec units is solid ceramic, and is suitable for use with glass or metal vessels.

Your Cimarec stirrer may be used for general laboratory mixing of solutions, including sample preparation, content analysis, solvent evaporations, digestions, media preparation and sterilization, titrations, sand baths, and microscale chemistry applications.

General Usage

Do not use this product for anything other than its intended usage.

Principles of Operation

Each Cimarec unit utilizes the latest in microprocessor technology to deliver a reliable, controlled, ceramic top stirrer.

The electronic stirring speed control will maintain the speed setpoint when the unit is loaded at ±5.0%. The motor in the Cimarec stirrers produces maximum stirring torque under normal laboratory load conditions, and is combined with a powerful magnet to provide exceptional magnetic coupling with a stir bar.

When stirring is turned off, the unique braking feature* on the Cimarec models immediately brings the fluid and stir bar down to a safe speed for quick flask removal.

** Patent Pending*

Unpacking and Installation

Unpacking

Remove your Cimarec stirrer from the carton. Inspect to ensure that the unit has not been damaged during shipment. If the unit appears to have sustained shipping damage contact the distributor from whom you purchased this product or Barnstead International Customer Service at 800-553-0039. Check for stir bar and thumbscrew prior to discarding packaging.

The following items are included in the shipment:
Cimarec Stirrer
Cord
Stir Bar
Adapter (100V models only)
Knob
Operator's Manual

If any of these items are missing from the carton, contact Barnstead International.

Warning
Use a properly grounded electrical outlet of correct voltage and current handling capacity.

Installation

Set the unit on a flat stable surface at least 12" away from combustible materials, and plug the cordset into a properly grounded electrical outlet of correct voltage and current handling capacity.

Operation

There is no ON/OFF button on the Cimarec stirrer. Simply plug unit in and turn the STIR knobs clockwise to activate.

Setting the Stirring Speed

Your Cimarec stirrer has an electronic feedback speed control which will maintain a precise speed setpoint from 60 rpm through 1200 rpm at ±5.0%. (Maximum speed is dependent on viscosity of the solution.) The Cimarec stirrers are equipped with a strong magnet and high torque motor which will draw a vortex in up to 1800 ml of water stirred in a 2 liter flask with a new 2" stir bar (4"x4" models include a 1" stir bar.)

To set the speed, turn the STIR knob to your desired setting. Turn the knob clockwise to increase the speed or counter-clockwise to decrease the speed. To discontinue stirring, turn knob counter-clockwise to OFF.

Maintenance

General Cleaning Instructions

Wipe exterior surfaces with lightly dampened cloth containing mild soap solution.

Troubleshooting

Error Codes

The following errors should not be addressed by the user. If any of the errors appear, contact Barnstead International Technical Service at 800-553-0039.

Displayed Message	Intended to Detect	Cause	Solution
E11 **Call Tech. Service**	Alternating current measurement failure.	Failure to detect alternating current.	Replace Control Board.
E12 **Call Tech. Service**	Motor system failure.	Locked rotor condition. Failure of motor. Failure of motor circuit. Failure of motor sensor.	Free locked rotor. Replace motor. Replace Control Board. Replace motor sensor.

Exploded Views

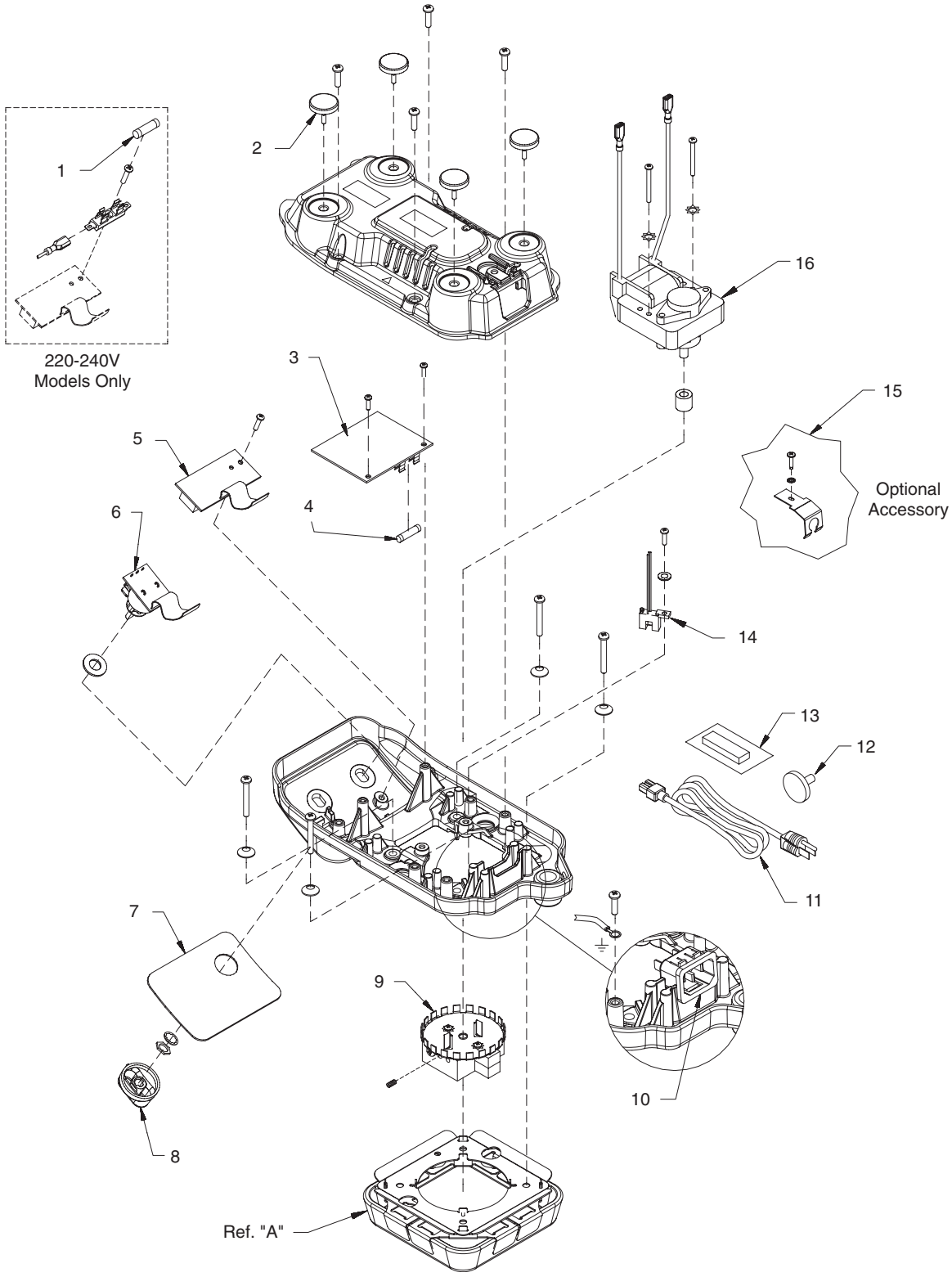

4x4 Exploded View

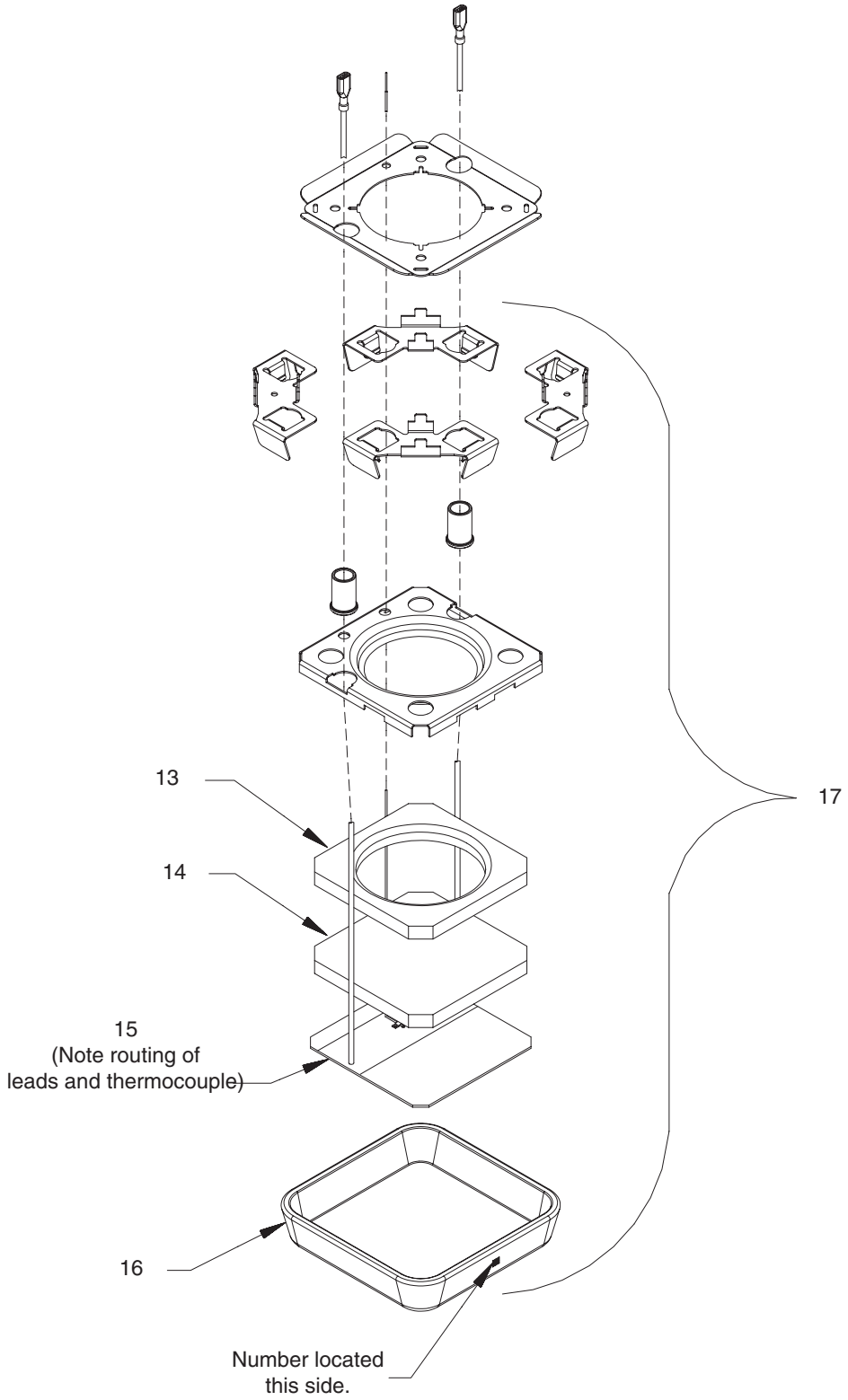

4x4 Exploded View - Top Plate

EXPLODED VIEWS

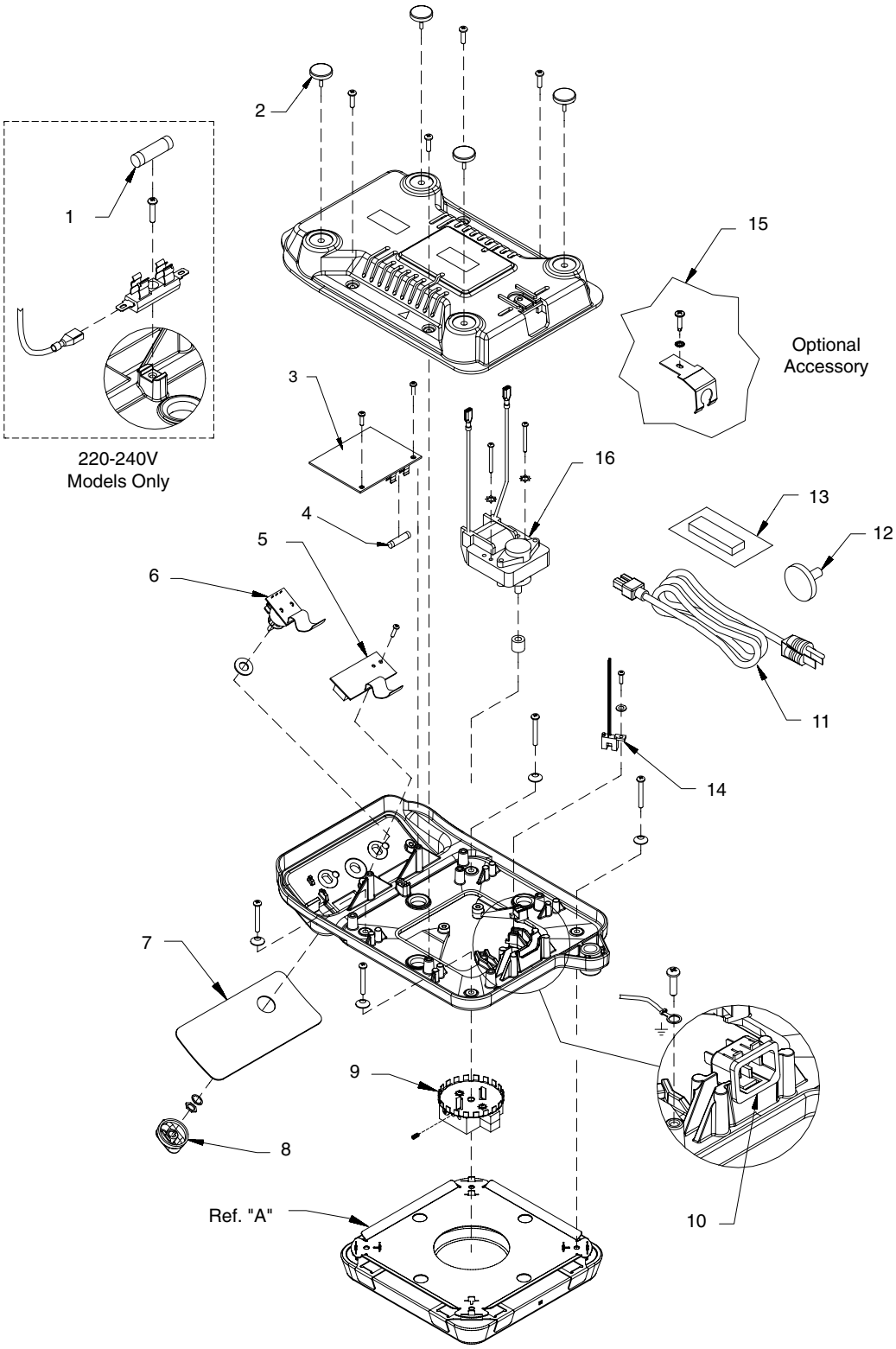

7x7 Exploded View

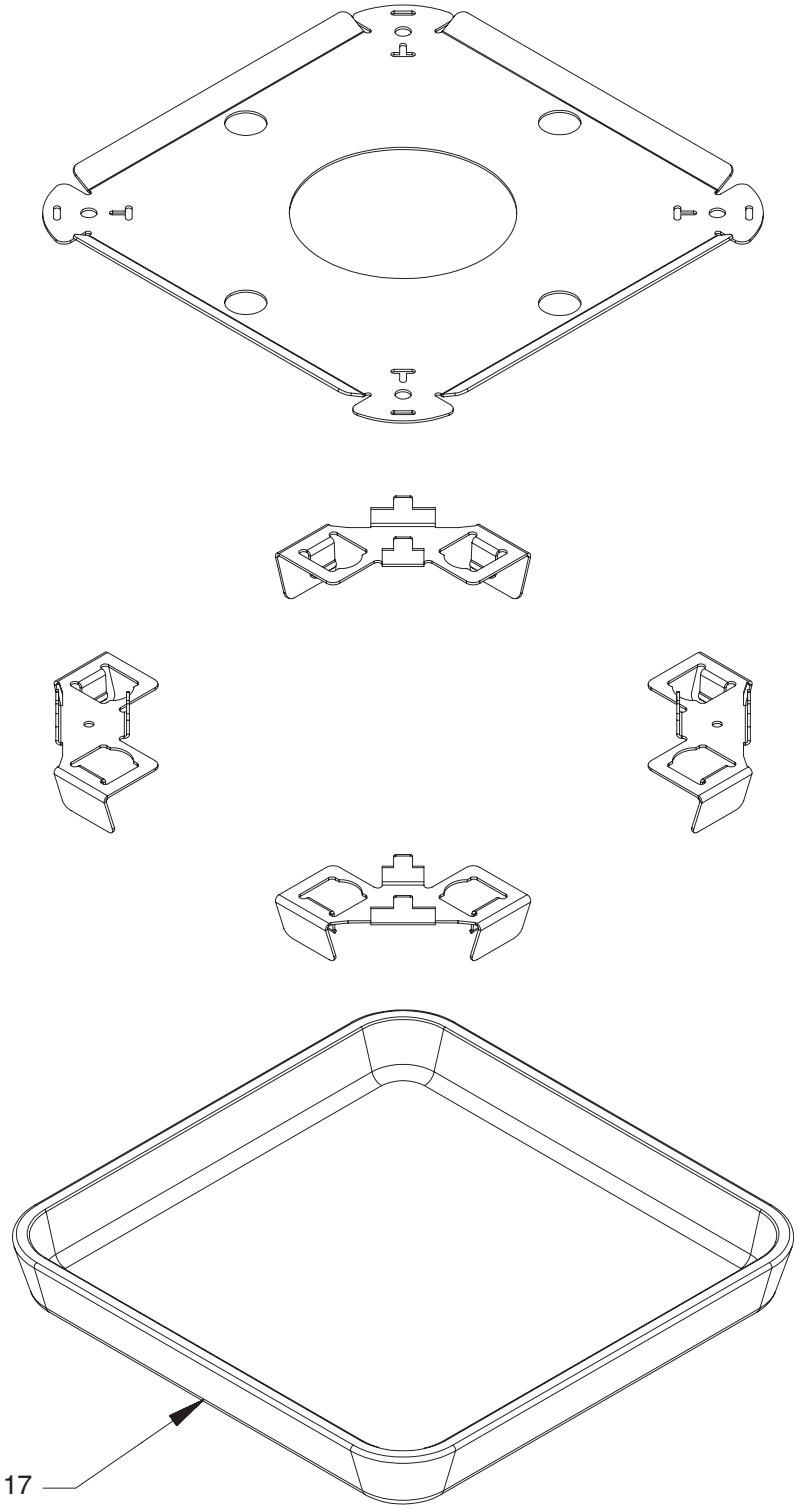

7x7 Exploded View - Top Plate

EXPLODED VIEWS

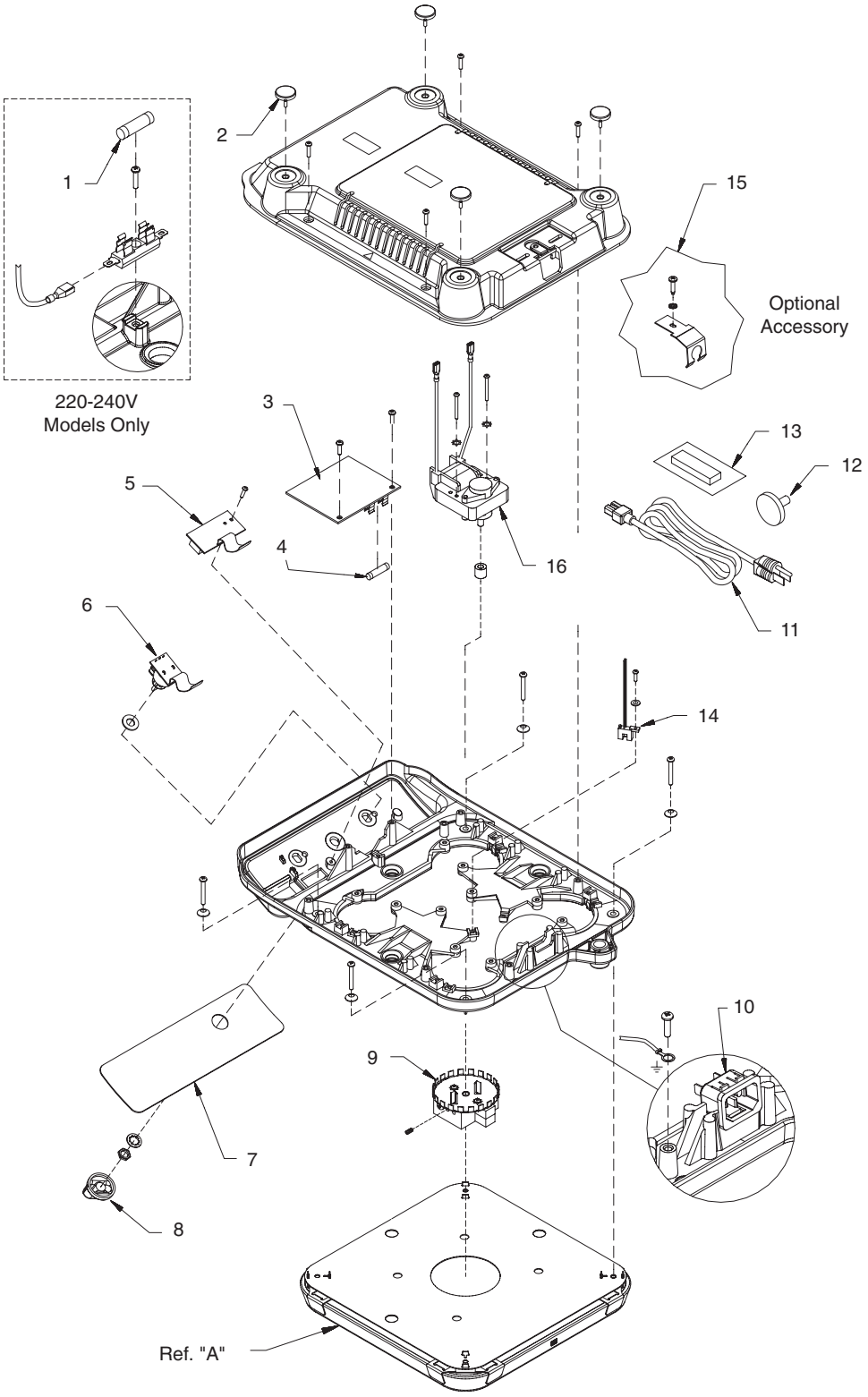

10x10 Exploded View

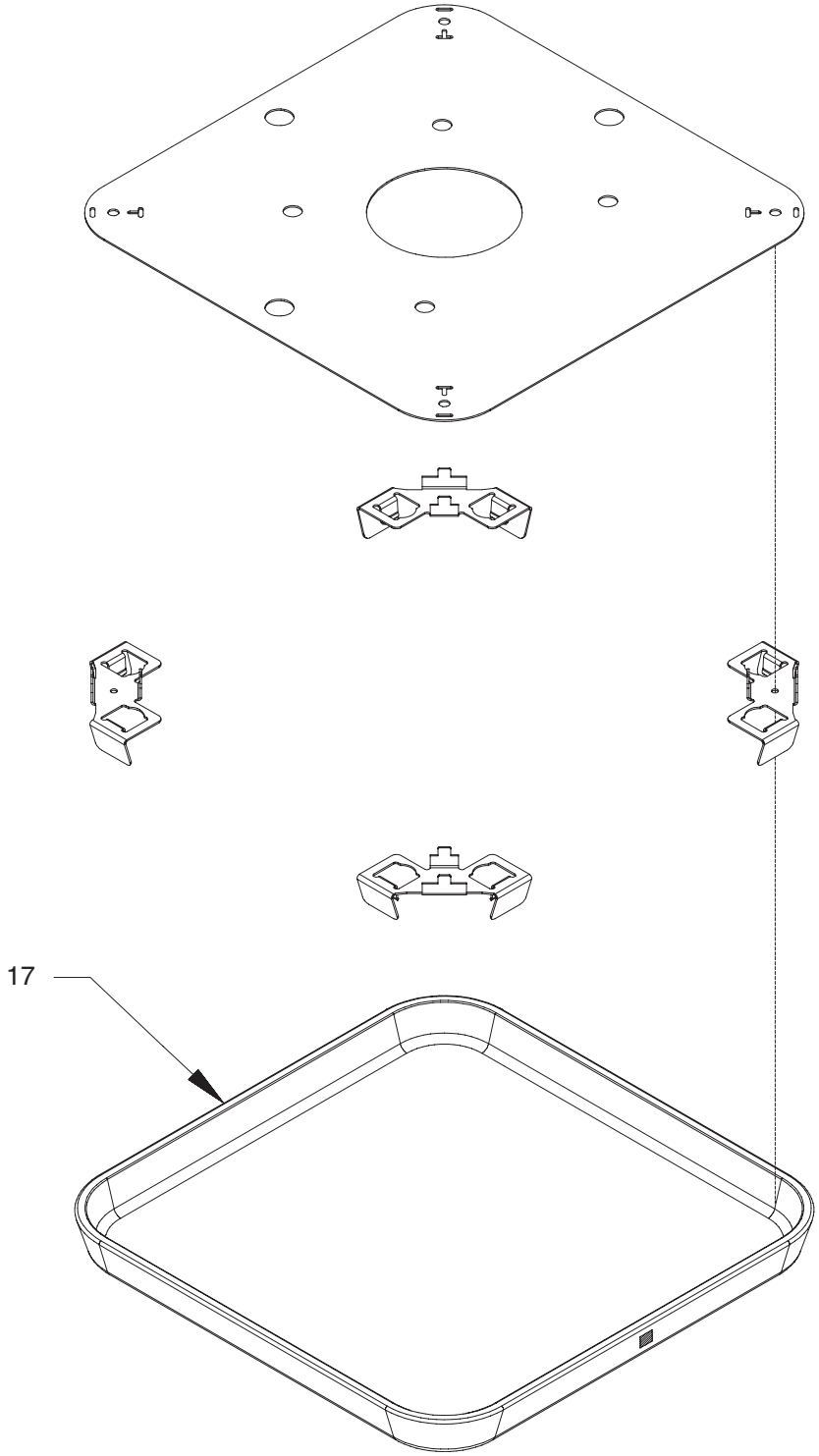

10x10 Exploded View - Top Plate

Wiring Diagram

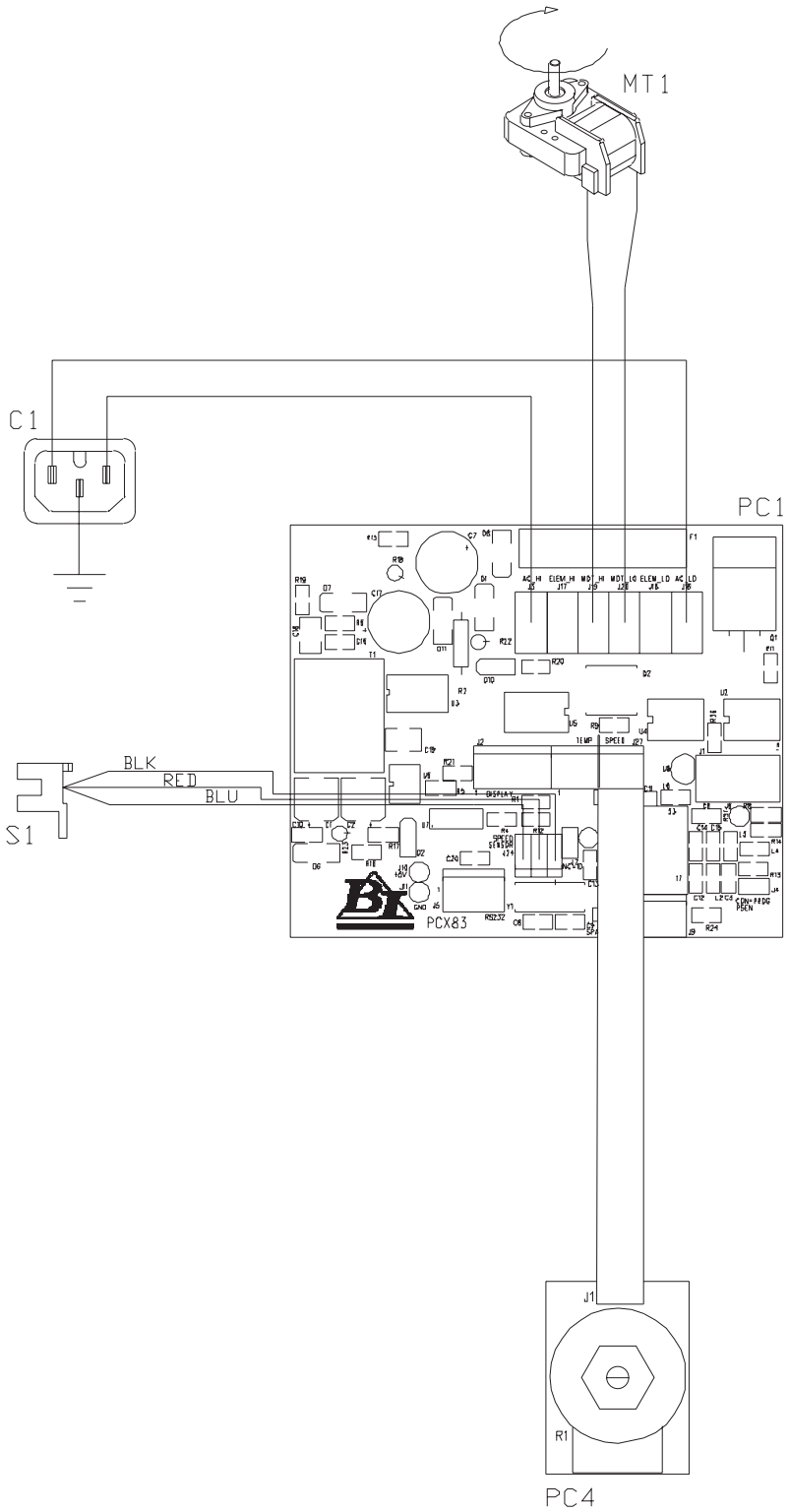

COMPONENT CHART

	S1308, S1311 (4x4) (7x7)	S1314 (10x10)
C1	CEX373	CEX373
MT1	SEE CHART	SEE CHART
PC1	PCX83	PC1313X3
PC2	PC1313X1	PC1313X1
S1	SC1313X1	SC1313X1

MOTOR CHART

	100V	120V	220-240V
MOTOR 4X4 & 7X7	MT1313X1	MT1313X1	MT1313X2
MOTOR 10X10	MT1316X1	MT1316X1	MT1316X2

Replacement Parts

Key	4x4 Part No.	7x7 Part No.	10x10 Part No.	Description
1	261575	261575	261575	PC Board Fuse - 220-240V
2	FTX34	FTX34	FTX34	Foot (4)
3	PC1311X1	PC1311X1	PC1314X1	Control Board - 100V, 120V
3	PC1311X2	PC1311X2	PC1314X2	Control Board - 220-240V
4	266058	266058	266058	PC Board Fuse - 100, 120V
5	PC1313X2	PC1313X2	PC1313X2	Display Board
6	PC1313X1	PC1313X1	PC1313X1	Speed/Heat Adjustment Board (2)
8	DLX278	DLX281	DLX284	Dial Plate
9	KBX103	KBX103	KBX104	Knob (2)
9	MG1310X1	MG1313X1	MG1313X1	Bar Magnet Assembly
10	CEX373	CEX373	CEX373	Power Entry Module
11	CRX106	CRX106	CRX106	Cord Set - 100 V, 120V
11	CRX107	CRX107	CRX107	Cord Set - 220-240V
12	KBX78	KBX78	KBX78	Knob
13	ZSX122A	ZSX65A	ZSX65A	Stir Bar
14	SC1310X1	SC1313X1	SC1313X1	Speed Sensor
15	AY1313X1	AY1313X1	AY1313X1	Retaining Clip - 100V, 120V
15	AY1313X2	AY1313X2	AY1313X2	Retaining Clip - 220-240V
16	MT1313X1	MT1313X1	MT1316X1	Motor - 120V, 100V
16	MT1313X2	MT1313X2	MT1316X2	Motor - 220-240V
17	540-0033	710-0117	719-0073	Ceramic Top

Ordering Procedures

Please refer to the Specification Plate for the complete model number, serial number, and series number when requesting service, replacement parts or in any correspondence concerning this unit.

All parts listed herein may be ordered from the Barnstead International dealer from whom you purchased this unit or can be obtained promptly from the factory. When service or replacement parts are needed we ask that you check first with your dealer. If the dealer cannot handle your request, then contact our Customer Service Department at 563-556-2241 or 800-553-0039.

Prior to returning any materials to Barnstead International, please contact our Customer Service Department for a “Return Materials Authorization” number (RMA). Material returned without an RMA number will be refused.

Two Year “Bumper to Bumper” Warranty

Barnstead International (“BARNSTEAD”) warrants that a product manufactured by Barnstead shall be free of defects in materials and workmanship for two (2) years from the first to occur of (i) the date the product is sold by BARNSTEAD or (ii) the date the product is purchased by the original retail customer (the “Commencement Date”). Except as expressly stated above, BARNSTEAD MAKES NO OTHER WARRANTY, EXPRESSED OR IMPLIED, WITH RESPECT TO THE PRODUCTS AND EXPRESSLY DISCLAIMS ANY AND ALL WARRANTIES, INCLUDING BUT NOT LIMITED TO, WARRANTIES OF DESIGN, MERCHANT ABILITY AND FITNESS FOR A PARTICULAR PURPOSE.

An authorized representative of BARNSTEAD must perform all warranty inspections. In the event of a defect covered by BARNSTEAD’s warranty, BARNSTEAD shall, as its sole obligation and exclusive remedy, provide free replacement parts to remedy the defective product. In addition, for products sold by BARNSTEAD within the continental United States or Canada, BARNSTEAD shall provide free labor to repair the products with the replacement parts, but only for a period of ninety (90) days from the Commencement Date.

BARNSTEAD’s warranty provided hereunder shall be null and void and without further force or effect if there is any (i) repair made to the product by a party other than BARNSTEAD or its duly authorized service representative, (ii) misuse (including use inconsistent with written operating instructions for the product), mishandling, contamination, overheating, modification or alteration of the product by any customer or third party or (iii) use of replacement parts that are obtained from a party who is not an authorized dealer of BARNSTEAD.

Heating elements, because of their susceptibility to overheating and contamination, must be returned to the BARNSTEAD factory and if, upon inspection, it is concluded that failure is due to factors other than excessive high temperature or contamination, BARNSTEAD will provide warranty replacement. As a condition to the return of any product, or any constituent part thereof, to BARNSTEAD’s factory, it shall be sent prepaid and a prior written authorization from BARNSTEAD assigning a Return Materials Number to the product or part shall be obtained.

IN NO EVENT SHALL BARNSTEAD BE LIABLE TO ANY PARTY FOR ANY DIRECT, INDIRECT, SPECIAL, INCIDENTAL, OR CONSEQUENTIAL DAMAGES, OR FOR ANY DAMAGES RESULTING FROM LOSS OF USE OR PROFITS, ANTICIPATED OR OTHERWISE, ARISING OUT OF OR IN CONNECTION WITH THE SALE, USE OR PERFORMANCE OF ANY PRODUCTS, WHETHER SUCH CLAIM IS BASED ON CONTRACT, TORT (INCLUDING NEGLIGENCE), ANY THEORY OF STRICT LIABILITY OR REGULATORY ACTION.

The name of the authorized Barnstead International dealer nearest you may be obtained by contacting Barnstead International:

BarnsteadInternational

Your Lab Starts Here

ISO 9001 REGISTERED

2555 Kerper Boulevard
P.O. Box 797
Dubuque, Iowa 52001-0797
Phone: 563-556-2241 or 800-553-0039
Fax: 563-589-0516
E-mail: mkt@barnstead.com
www.barnstead.com